CSE 373
Data Structures and Algorithms

Lecture 21: Graphs III

Depth-first search

- **depth-first search (DFS)**: finds a path between two vertices by exploring each possible path as many steps as possible before backtracking
  - Often implemented recursively

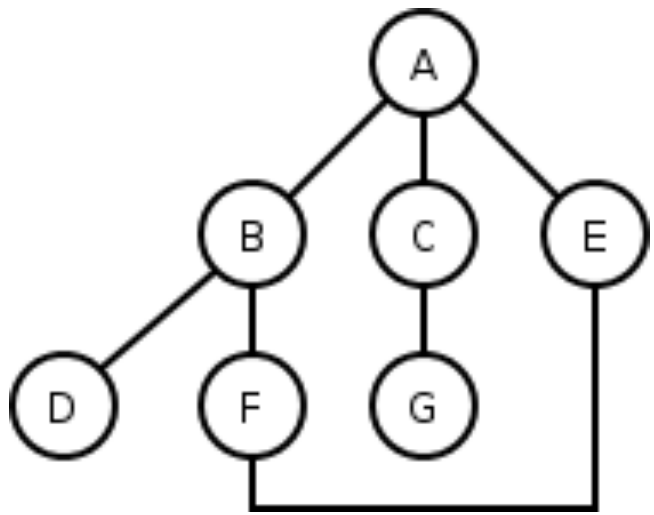

DFS example

- All DFS paths from A to others (assumes alphabetical edge order)
  - A
  - A → B
  - A → B → D
  - A → B → F
  - A → B → F → E
  - A → C
  - A → C → G

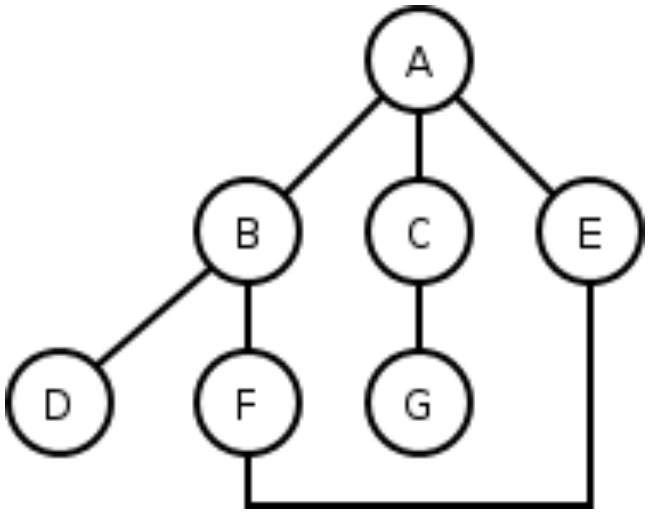

- What are the paths that DFS did not find?

DFS pseudocode

- Pseudo-code for depth-first search:

```
dfs(v1, v2):
    dfs(v1, v2, {})

dfs(v1, v2, path):
    path += v1
    mark v1 as visited.
    if v1 is v2:
        path is found.

    for each unvisited neighbor v_i of v1
    where there is an edge from v1 to v_i:
        if dfs(v_i, v2, path) finds a path, path is found.

    path -= v1.   path is not found.
```

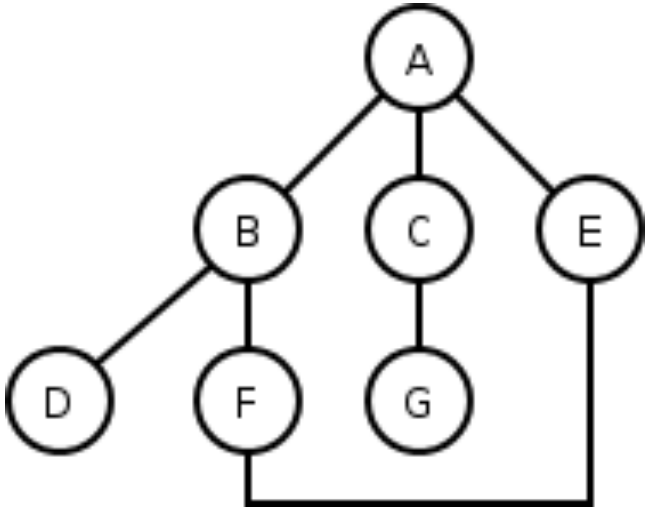

VertexInfo class

```
public class VertexInfo<V> {
   public V v;
   public boolean visited;

   public VertexInfo(V v) {
      this.v = v;
      clear();
   }

   public void clear() {
      visited = false;
   }
}
```

DFS observations

- Guaranteed to find a path if one exists
- Easy to retrieve exactly what the path is (to remember the sequence of edges taken) if we find it
- *optimality*: Not optimal. DFS is guaranteed to find a path, not necessarily <u>the</u> best/shortest path
  - Example: DFS(A, E) may return
    A → B → F → E

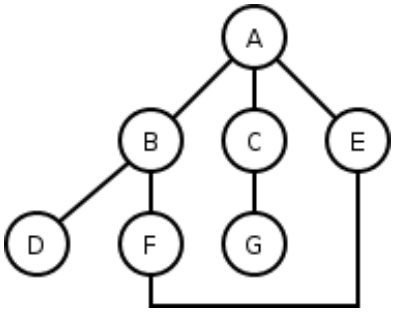

Another DFS example

- Using DFS, find a path from BOS to LAX.

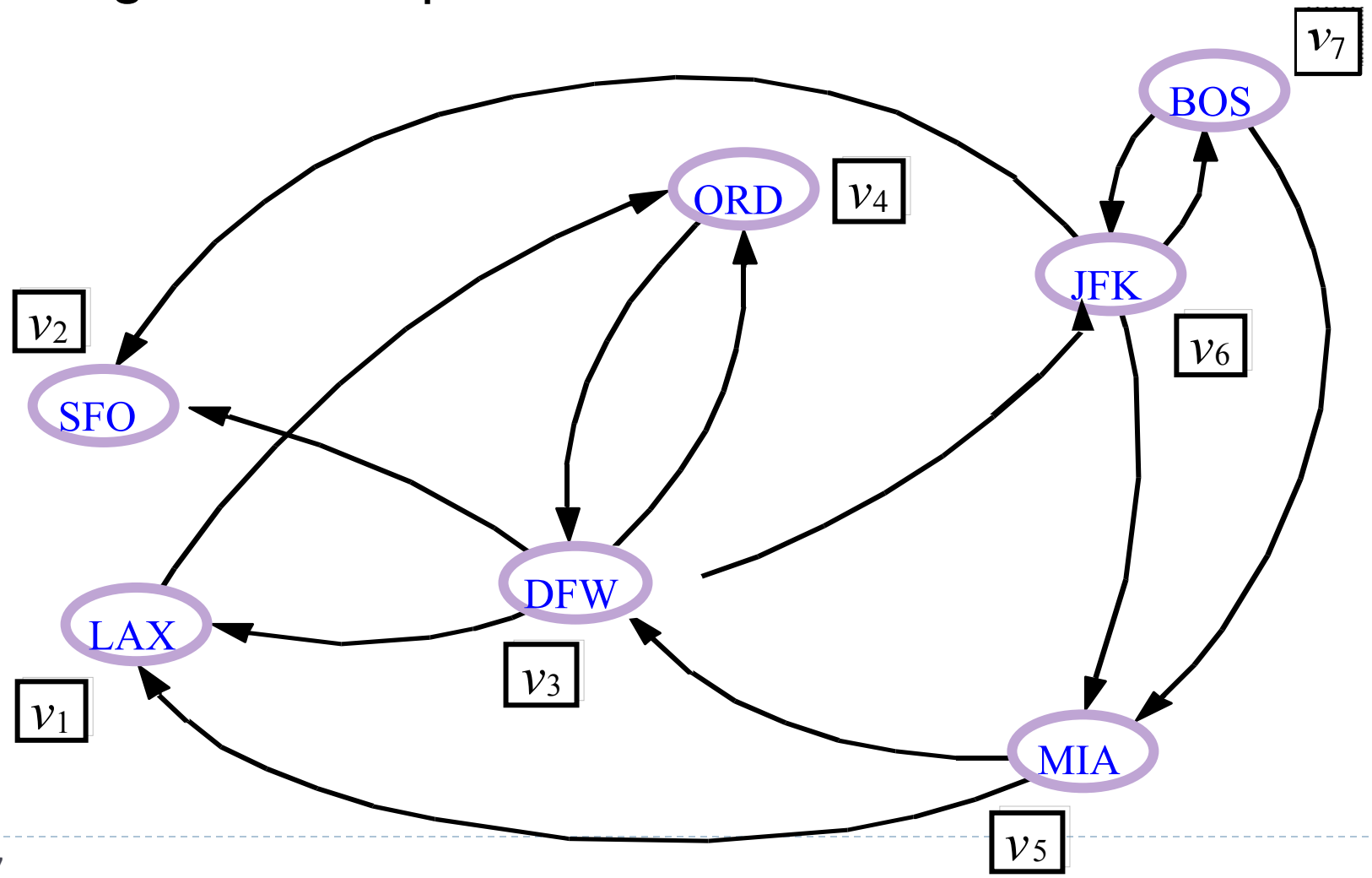

Breadth-first search

- **breadth-first search (BFS)**: finds a path between two nodes by taking one step down all paths and then immediately backtracking
  - Often implemented by maintaining a list or queue of vertices to visit
  - BFS always returns the path with the fewest edges between the start and the goal vertices

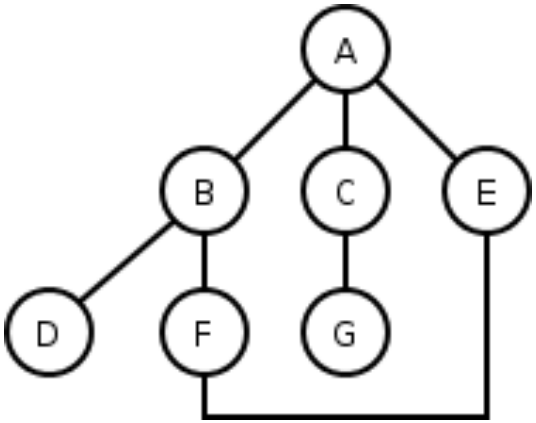

BFS example

- All BFS paths from A to others (assumes alphabetical edge order)
  - A
  - A → B
  - A → C
  - A → E
  - A → B → D
  - A → B → F
  - A → C → G

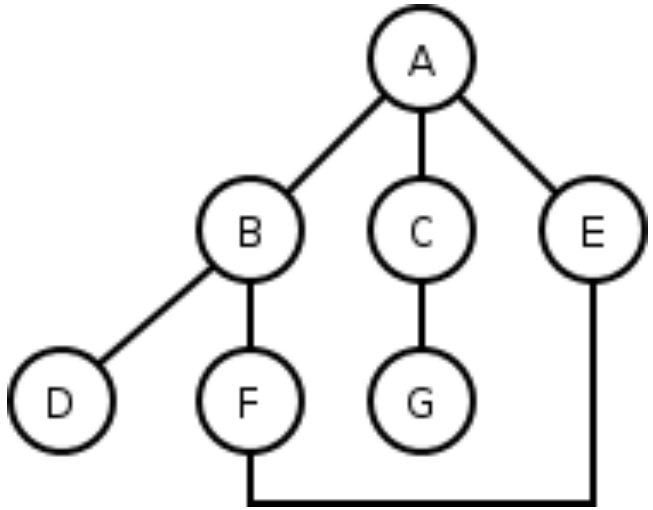

- What are the paths that BFS did not find?

BFS pseudocode

- Pseudo-code for breadth-first search:

```
bfs(v1, v2):
    List := {v1}
    mark v1  as visited.

    while List not empty:
        v := List.removeFirst()
        if v is v2:
            path is found.

        for each unvisited neighbor v_i of v
        where there is an edge from v to v_i:
            mark v_i as visited
            List.addLast(v_i).

    path is not found.
```

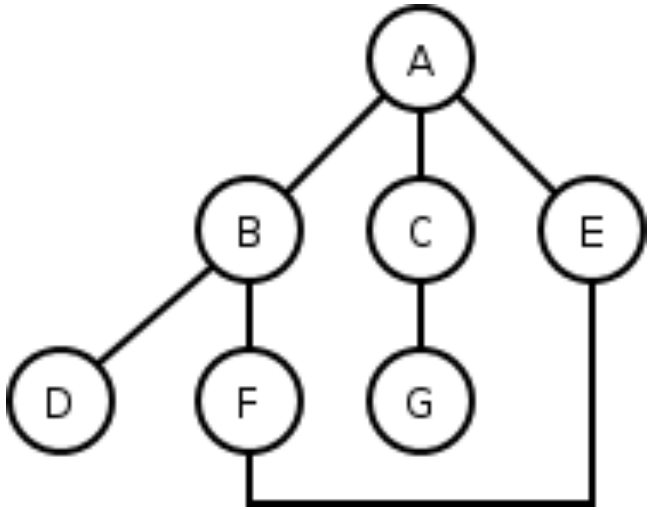

BFS observations

- *optimality*:
  - In unweighted graphs, optimal. (fewest edges = best)
  - In weighted graphs, not optimal.
    (path with fewest edges might not have the lowest weight)

- *disadvantage*: Harder to reconstruct what the actual path is once you find it
  - Conceptually, BFS is exploring many possible paths in parallel, so it's not easy to store a path array/list in progress

- observation: Any particular vertex is only part of one partial path at a time
  - We can keep track of the path by storing predecessors for each vertex (references to the previous vertex in that path)

Another BFS example

- Using BFS, find a path from BOS to LAX.

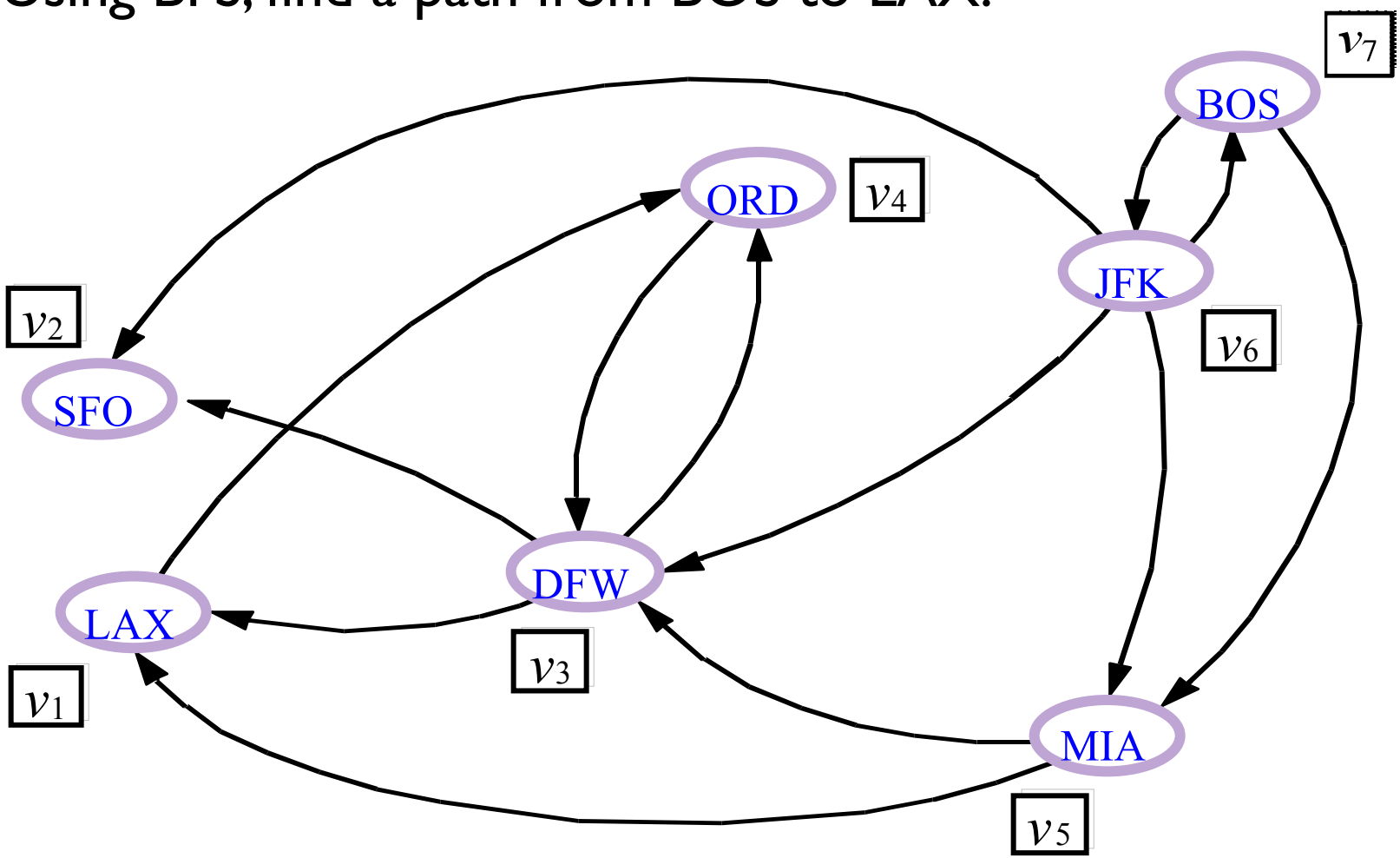

DFS, BFS runtime

- In terms of the number of vertices $|V|$ and the number of edges $|E|$:
  - What is the expected runtime of DFS?
  - What is the expected runtime of BFS?

- Answer: $O(|V| + |E|)$
  - Each algorithm must potentially visit every node and/or examine every edge once.

- What is the space complexity of each algorithm?
  - $O(|V|)$