C++ Smart Pointers

CSE 333 Summer 2020

Instructor: Travis McGaha

Teaching Assistants:

Jeter Arellano, Ramya Challa, Kyrie Dowling, Ian Hsiao, Allen Jung, Sylvia Wang

Poll Everywhere

pollev.com/cse33320su

About how long did Exercise 14 take?

A. 0-1 Hours
B. 1-2 Hours
C. 2-3 Hours
D. 3-4 Hours
E. 4+ Hours
F. I didn't submit / I prefer not to say

Side question:
Best way to cook a potato?

Administrivia

- Exercise 13 released today, due Monday
  - C++ smart pointers (Today's topic!)
- HW3 is due Thursday (8/6)
  - Get started if you haven't done so already!
  - Useful debugging tools covered in section, look over those materials
- Mid quarter feedback:
  - Pacing is a bit fast (partially due to only having 9 weeks, sorry!)
  - Students like polls, a bit split on breakout rooms though
  - Code examples that are posted could be better
    - Include examples with good style &

Lecture Outline

- **Smart Pointers**
  - **Intro and `toy_ptr`**
  - `unique_ptr`
  - Reference Counting and `shared_ptr` vs `weak_ptr`

Last Time…

- We learned about STL
- We noticed that STL was doing an enormous amount of copying
- If we want to store Derived objects in an STL container of Base objects, we get object slicing ☹
- A solution: store pointers in containers instead of objects
  - But who's responsible for deleting and when???

C++ Smart Pointers

- A smart pointer is an *object* that stores a pointer to a heap-allocated object
  - A smart pointer looks and behaves like a regular C++ pointer
    - By overloading `*`, `->`, `[]`, etc.
  - These can help you manage memory
    - The smart pointer will delete the pointed-to object *at the right time* including invoking the object's destructor
      - When that is depends on what kind of smart pointer you use
    - With correct use of smart pointers, you no longer have to remember when to `delete` `new`'d memory!

A Toy Smart Pointer

- We can implement a simple one with:
  - A constructor that accepts a pointer
  - A destructor that frees the pointer
  - Overloaded * and -> operators that access the pointer

A smart pointer is just a
Template object.

ToyPtr Class Template

ToyPtr.h

```
#ifndef _TOYPTR_H_
#define _TOYPTR_H_

template <typename T> class ToyPtr {
 public:
  ToyPtr(T *ptr) : ptr_(ptr) { }     // constructor
  ~ToyPtr() { delete ptr_; }         // destructor
```

Takes advantage of implicit calling of destructor to clean up for us

```
  T &operator*() { return *ptr_; }   // * operator
  T *operator->() { return ptr_; }   // -> operator

 private:
  T *ptr_;                           // the pointer itself
};

#endif  // _TOYPTR_H_
```

ToyPtr Example

usetoy.cc

```
#include <iostream>
#include <cstdlib>
#include "ToyPtr.h"

int main(int argc, char **argv) {
  // Create a dumb pointer
  std::string *leak = new std::string("Like");

  // Create a "smart" pointer (OK, it's still pretty dumb)
  ToyPtr<std::string> notleak(new std::string("Antennas"));

  std::cout << "   *leak: " << *leak << std::endl;
  std::cout << "*notleak: " << *notleak << std::endl;

  return EXIT_SUCCESS;
}
```

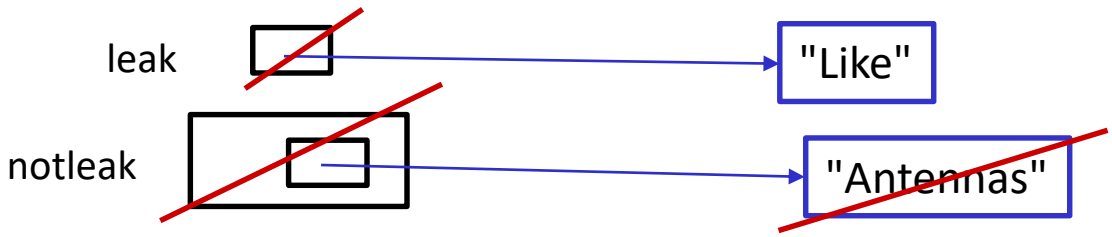

Notleak cleans up for us, leak has a memory leak

What Makes This a Toy?

- Can't handle:
  - Arrays // needs to use `delete[]`
  - Copying
  - Reassignment
  - Comparison
  - … plus many other subtleties…
- Luckily, others have built non-toy smart pointers for us!

ToyPtr Class Template Issues

UseToyPtr.cc

```
#include "./ToyPtr.h"

// We want two pointers!
int main(int argc, char **argv) {
  ToyPtr<int> x(new int(5));
  ToyPtr<int> y = x;
  return EXIT_SUCCESS;
}
```

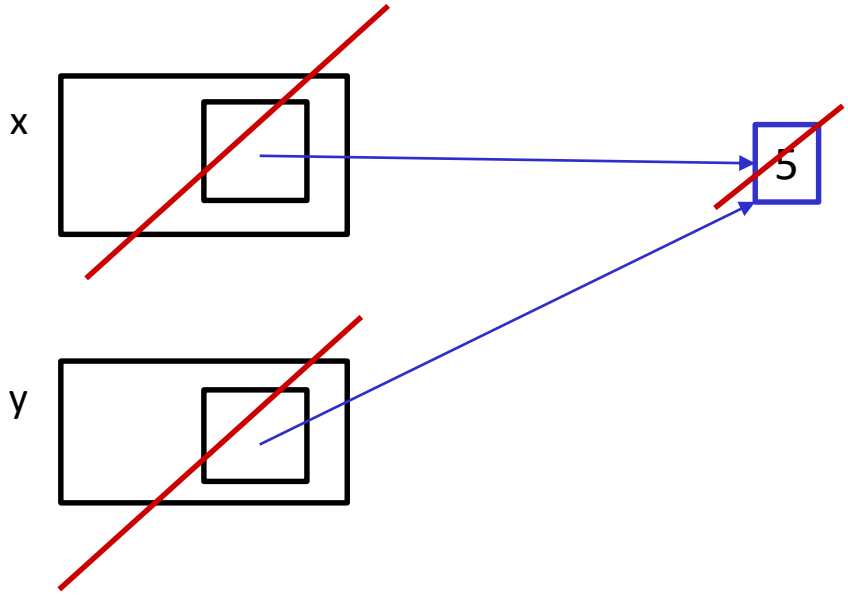

!! Double Delete!!

Lecture Outline

- **Smart Pointers**
  - Intro and `toy_ptr`
  - **`unique_ptr`**
  - Reference Counting and `shared_ptr` vs `weak_ptr`

Introducing: `unique_ptr`

- A `unique_ptr` is the *sole owner* of its pointee
  - It will call `delete` on the pointee when it falls out of scope

    Via the unique_ptr destructor
- Guarantees uniqueness by disabling copy and assignment

Using unique_ptr

unique1.cc

Must include <memory>

```
#include <iostream>  // for std::cout, std::endl
#include <memory>    // for std::unique_ptr
#include <cstdlib>   // for EXIT_SUCCESS

void Leaky() {
  int *x = new int(5);  // heap-allocated
  (*x)++;
  std::cout << *x << std::endl;
}  // never used delete, therefore leak

void NotLeaky() {
  std::unique_ptr<int> x(new int(5));  // wrapped, heap-allocated
  (*x)++;
  std::cout << *x << std::endl;
}  // never used delete, but no leak

int main(int argc, char **argv) {
  Leaky();
  NotLeaky();
  return EXIT_SUCCESS;
}
```

Memory Leak☹

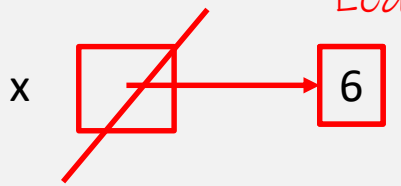

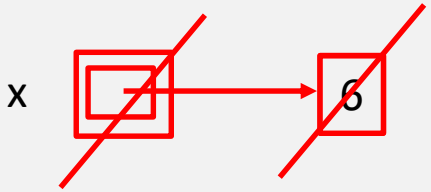

unique_ptrs Cannot Be Copied

- std::unique_ptr has disabled its copy constructor and assignment operator
  - You cannot copy a unique_ptr, helping maintain "uniqueness" or "ownership"

uniquefail.cc

```
#include <memory>    // for std::unique_ptr
#include <cstdlib>   // for EXIT_SUCCESS

int main(int argc, char **argv) {
  std::unique_ptr<int> x(new int(5));   // ctor that takes a pointer ✓

  std::unique_ptr<int> y(x);            // cctor, disabled. compiler error ✗

  std::unique_ptr<int> z;               // default ctor, holds nullptr ✓

  z = x;                                // op=, disabled. compiler error ✗

  return EXIT_SUCCESS;
}
```

Zoom voting:

yes Compiles | no Doesn't compile

unique_ptr Operations

unique2.cc

```
#include <memory>   // for std::unique_ptr
#include <cstdlib>  // for EXIT_SUCCESS

using namespace std;
typedef struct { int a, b; } IntPair;

int main(int argc, char **argv) {
  unique_ptr<int> x(new int(5));

  int *ptr = x.get(); // Return a pointer to pointed-to object
  int val = *x;       // Return the value of pointed-to object

  // Access a field or function of a pointed-to object
  unique_ptr<IntPair> ip(new IntPair);
  ip->a = 100;

  // Deallocate current pointed-to object and store new pointer
  x.reset(new int(1));

  ptr = x.release();  // Release responsibility for freeing
  delete ptr;
  return EXIT_SUCCESS;
}
```

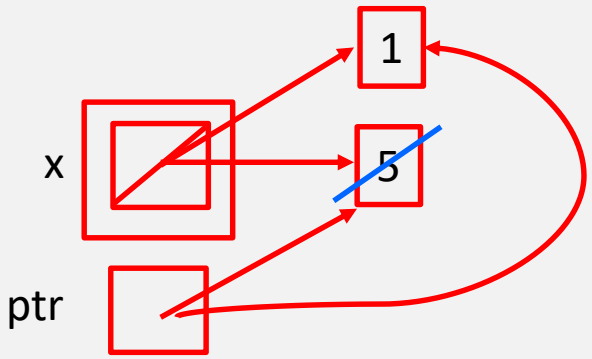

Transferring Ownership

- Use **reset**() and **release**() to transfer ownership
  - **release** returns the pointer, sets wrapped pointer to `nullptr`
  - **reset** `delete`'s the current pointer and stores a new one

unique3.cc

```
int main(int argc, char **argv) {
  unique_ptr<int> x(new int(5));
  cout << "x: " << x.get() << endl;

  unique_ptr<int> y(x.release());  // x abdicates ownership to y
  cout << "x: " << x.get() << endl;
  cout << "y: " << y.get() << endl;

  unique_ptr<int> z(new int(10));

  // y transfers ownership of its pointer to z.
  // z's old pointer was delete'd in the process.
  z.reset(y.release());

  return EXIT_SUCCESS;
}
```

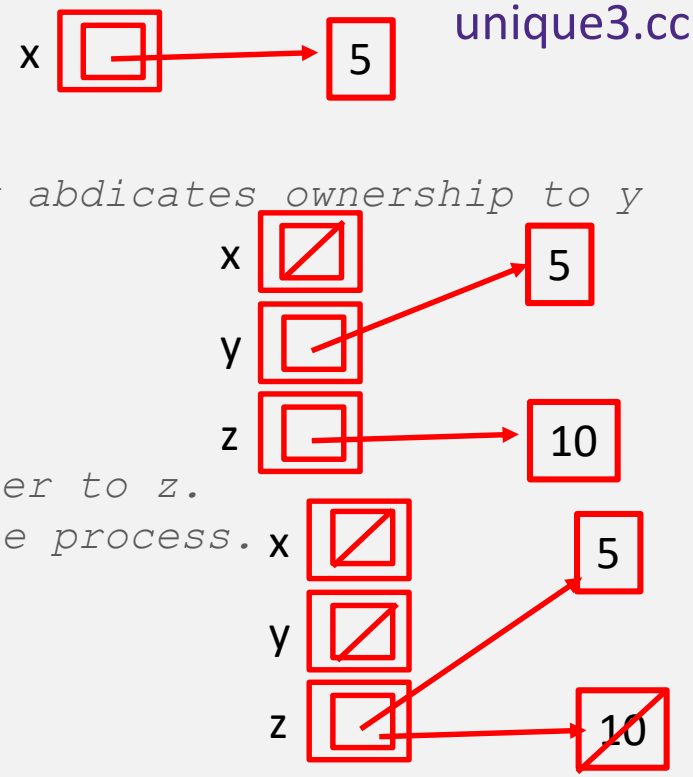

Caution with get() !!

UseToyPtr.cc

```
#include <memory>

// Trying to get two pointers to the same thing
int main(int argc, char **argv) {
  unique_ptr<int> x(new int(5));
  unique_ptr<int> y(x.get());
  return EXIT_SUCCESS;
}
```

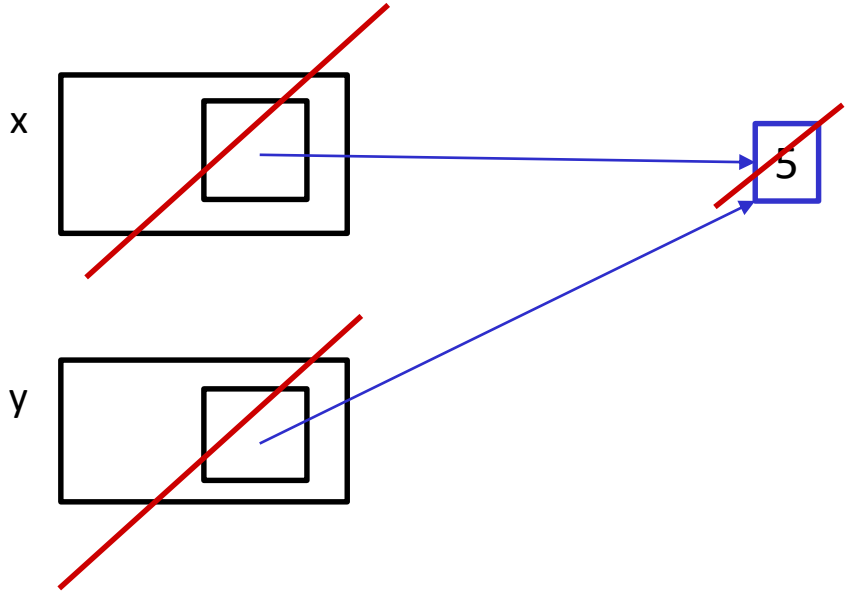

!! Double Delete!! ☹

`unique_ptr` and STL

- `unique_ptr`s *can* be stored in STL containers
  - Wait, what? STL containers like to make lots of copies of stored objects and `unique_ptr`s cannot be copied…
- Move semantics to the rescue!
  - When supported, STL containers will *move* rather than *copy*
    - `unique_ptr`s support move semantics

We will discuss move semantics briefly, not a core concept to 333

Aside: Copy Semantics

- Assigning values typically means making a copy
  - Sometimes this is what you want
    - *e.g.* assigning a string to another makes a copy of its value
  - Sometimes this is wasteful
    - *e.g.* assigning a returned string goes through a temporary copy

copysemantics.cc

```
std::string ReturnString(void) {
  std::string x("Justin");
  return x;  // this return might copy
}

int main(int argc, char **argv) {
  std::string a("bleg");
  std::string b(a);  // copy a into b

  b = ReturnString();   // copy return value into b

  return EXIT_SUCCESS;
}
```

Aside: Move Semantics (C++11)

- "Move semantics" move values from one object to another without copying ("stealing")
  - Useful for optimizing away temporary copies
  - A complex topic that uses things called "*rvalue references*"
    - Mostly beyond the scope of 333 this quarter

movesemantics.cc

```
std::string ReturnString(void) {
  std::string x("Justin");
  // this return might copy
  return x;
}
int main(int argc, char **argv) {
  std::string a("bleg");

  // moves a to b
  std::string b = std::move(a);
  std::cout << "a: " << a << std::endl;
  std::cout << "b: " << b << std::endl;

  // moves the returned value into b
  b = std::move(ReturnString());
  std::cout << "b: " << b << std::endl;

  return EXIT_SUCCESS;
}
```

unique_ptr and STL Example

uniquevec.cc

```
int main(int argc, char **argv) {
  std::vector<std::unique_ptr<int> > vec;

  vec.push_back(std::unique_ptr<int>(new int(9)));
  vec.push_back(std::unique_ptr<int>(new int(5)));
  vec.push_back(std::unique_ptr<int>(new int(7)));

  // z holds 5
  int z = *vec[1];
  std::cout << "z is: " << z << std::endl;

  // compiler error!
  std::unique_ptr<int> copied = vec[1];

  // moved points to 5, vec[1] is nullptr
  std::unique_ptr<int> moved = std::move(vec[1]);
  std::cout << "*moved: " << *moved << std::endl;
  std::cout << "vec[1].get(): " << vec[1].get() << std::endl;

  return EXIT_SUCCESS;
}
```

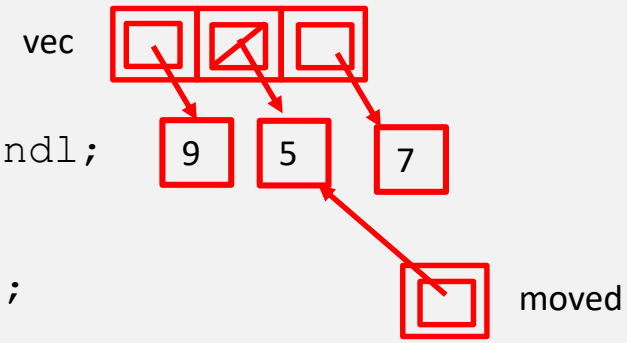

unique_ptr and Arrays

- unique_ptr can store arrays as well
  - Will call delete[] on destruction

unique5.cc

```
#include <memory>    // for std::unique_ptr
#include <cstdlib>   // for EXIT_SUCCESS

using namespace std;

int main(int argc, char **argv) {
  unique_ptr<int[]> x(new int[5]);

  x[0] = 1;
  x[2] = 2;

  return EXIT_SUCCESS;
}
```

Lecture Outline

- **Smart Pointers**
  - Intro and `toy_ptr`
  - `unique_ptr`
  - **Reference Counting and `shared_ptr` vs `weak_ptr`**

Reference Counting

- Reference counting is a technique for managing resources by counting and storing the number of references (*i.e.* pointers that hold the address) to an object

```
int *p = new int(3);
int *q = p;
q = new int(33);
p = new int(333);
```

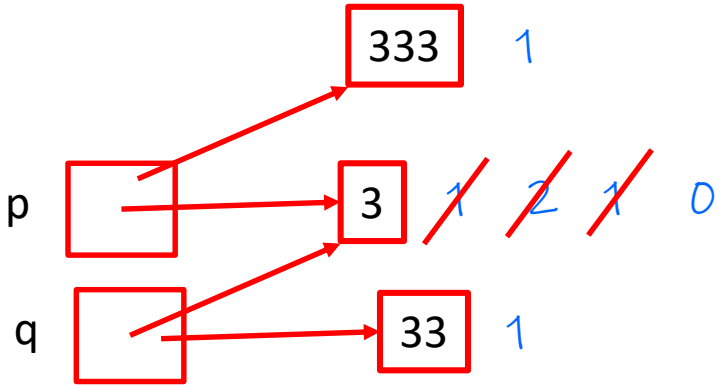

std::shared_ptr

- shared_ptr is similar to unique_ptr but we allow shared objects to have multiple owners
  - The copy/assign operators are not disabled and *increment* or *decrement* reference counts as needed
    - After a copy/assign, the two shared_ptr objects point to the same pointed-to object and the (shared) reference count is 2
  - When a shared_ptr is destroyed, the reference count is *decremented*
    - When the reference count hits 0, we delete the pointed-to object!

shared_ptr Example

sharedexample.cc

```
#include <cstdlib>    // for EXIT_SUCCESS
#include <iostream>   // for std::cout, std::endl
#include <memory>     // for std::shared_ptr

int main(int argc, char **argv) {
  std::shared_ptr<int> x(new int(10));  // ref count: 1

  // temporary inner scope (!)
  {
    std::shared_ptr<int> y = x;         // ref count: 2
    std::cout << *y << std::endl;
  }

  std::cout << *x << std::endl;         // ref count: 1

  return EXIT_SUCCESS;
}                                       // ref count: 0
```

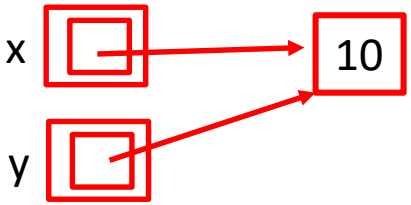

shared_ptrs and STL Containers

- Even simpler than unique_ptrs
  - Safe to store shared_ptrs in containers, since copy/assign maintain a shared reference count

sharedvec.cc

```
vector<std::shared_ptr<int> > vec;

vec.push_back(std::shared_ptr<int>(new int(9)));
vec.push_back(std::shared_ptr<int>(new int(5)));
vec.push_back(std::shared_ptr<int>(new int(7)));

int &z = *vec[1];
std::cout << "z is: " << z << std::endl;

std::shared_ptr<int> copied = vec[1];  // works!
std::cout << "*copied: " << *copied << std::endl;

std::shared_ptr<int> moved = std::move(vec[1]);  // works!
std::cout << "*moved: " << *moved << std::endl;
std::cout << "vec[1].get(): " << vec[1].get() << std::endl;
```

Cycle of shared_ptrs

strongcycle.cc

```
#include <cstdlib>
#include <memory>

using std::shared_ptr;

struct A {
  shared_ptr<A> next;
  shared_ptr<A> prev;
};

int main(int argc, char **argv) {
  shared_ptr<A> head(new A());
  head->next = shared_ptr<A>(new A());
  head->next->prev = head;

  return EXIT_SUCCESS;
}
```

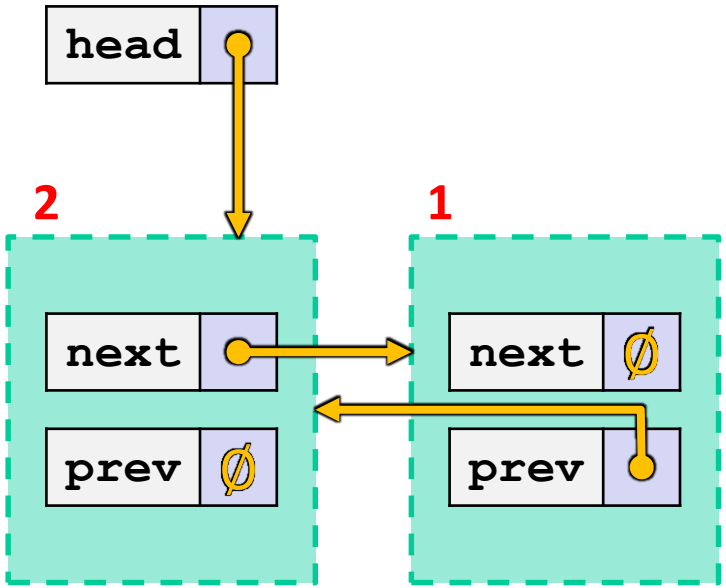

- What happens when we `delete head`?

std::weak_ptr

- weak_ptr is similar to a shared_ptr but doesn't affect the reference count
  - Can *only* "point to" an object that is managed by a shared_ptr
  - Not *really* a pointer – can't actually dereference unless you "get" its associated shared_ptr
  - Because it doesn't influence the reference count, weak_ptrs can become "*dangling*"
    - Object referenced may have been delete'd
    - But you can check to see if the object still exists

- Can be used to break our cycle problem!

Breaking the Cycle with `weak_ptr`

weakcycle.cc

```
#include <cstdlib>
#include <memory>

using std::shared_ptr;
using std::weak_ptr;

struct A {
  shared_ptr<A> next;
  weak_ptr<A> prev;
};

int main(int argc, char **argv) {
  shared_ptr<A> head(new A());
  head->next = shared_ptr<A>(new A());
  head->next->prev = head;

  return EXIT_SUCCESS;
}
```

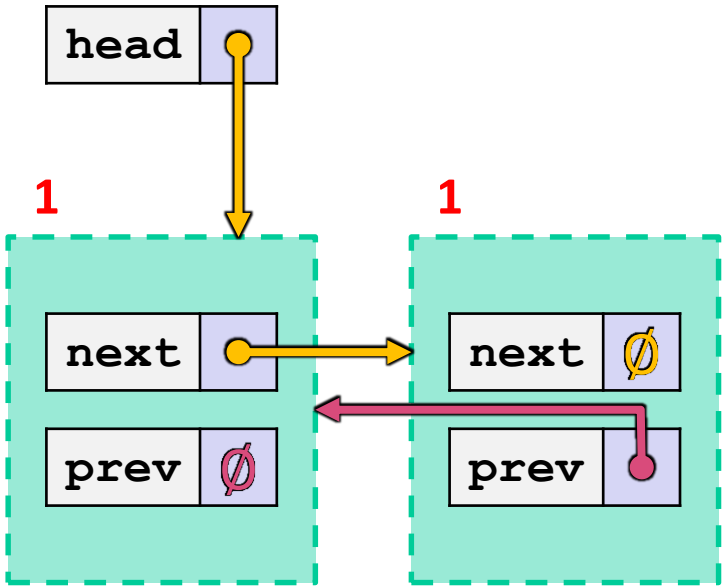

- Now what happens when we `delete` `head`?

Using a weak_ptr

usingweak.cc

```
#include <cstdlib>    // for EXIT_SUCCESS
#include <iostream>   // for std::cout, std::endl
#include <memory>     // for std::shared_ptr, std::weak_ptr

int main(int argc, char **argv) {
  std::weak_ptr<int> w;

  {  // temporary inner scope
    std::shared_ptr<int> x;
    {  // temporary inner-inner scope
      std::shared_ptr<int> y(new int(10));
      w = y;
      x = w.lock();  // returns "promoted" shared_ptr
      std::cout << *x << std::endl;
    }
    std::cout << *x << std::endl;
  }
  std::shared_ptr<int> a = w.lock();
  std::cout << a << std::endl;

  return EXIT_SUCCESS;
}
```

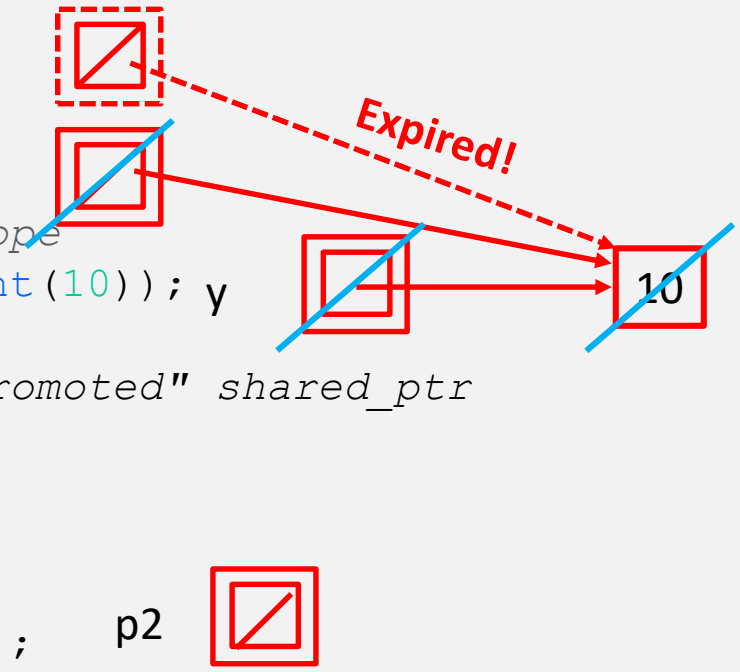

"Smart" Pointers

- Smart pointers still don't know everything, you must be careful with what pointers you give it to manage.
  - Smart pointers can't tell if a pointer is on the heap or not.
    - Still uses delete on default.
  - Smart pointers can't tell if you are re-using a raw pointer.

Using a non-heap pointer

```
#include <cstdlib>
#include <memory>

using std::shared_ptr;
using std::weak_ptr;

int main(int argc, char **argv) {
  int x = 333;

  shared_ptr<int> p1(&x);

  return EXIT_SUCCESS;
}
```

- Smart pointers can't tell if the pointer you gave points to the heap!
  - Will still call delete on the pointer when destructed.

Re-using a raw pointer

```
#include <cstdlib>
#include <memory>

using std::unique_ptr;


int main(int argc, char **argv) {
  int *x = new int(333);

  unique_ptr<int> p1(x);

  unique_ptr<int> p2(x);

  return EXIT_SUCCESS;
}
```

- Smart pointers can't tell if you are re-using a raw pointer.

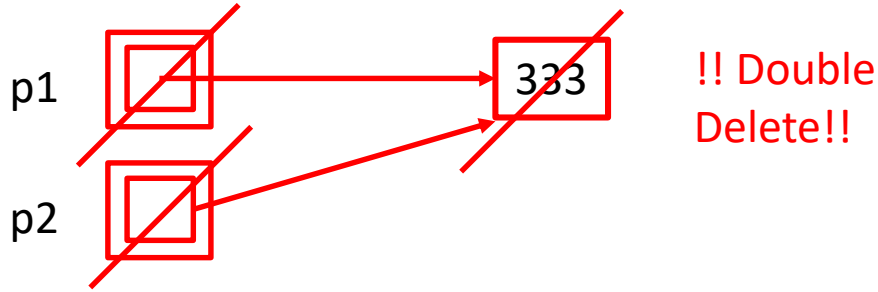

Re-using a raw pointer

```
#include <cstdlib>
#include <memory>

using std::shared_ptr;


int main(int argc, char **argv) {
  int *x = new int(333);

  shared_ptr<int> p1(x);  // ref count:

  shared_ptr<int> p2(x);  // ref count:

  return EXIT_SUCCESS;
}
```

- Smart pointers can't tell if you are re-using a raw pointer.

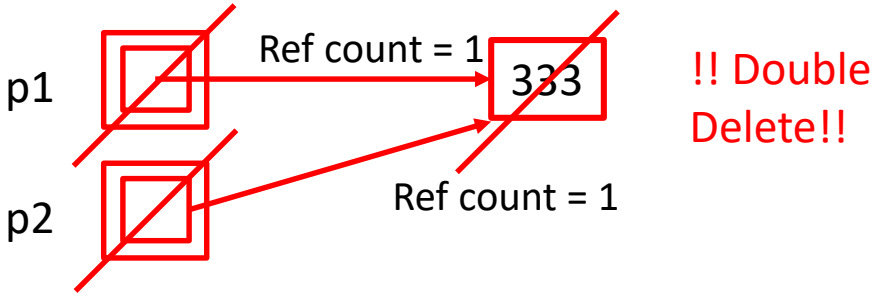

Re-using a raw pointer: Fixed Code

```
#include <cstdlib>
#include <memory>

using std::shared_ptr;

int main(int argc, char **argv) {
  int *x = new int(333);

  shared_ptr<int> p1(new int(333));

  shared_ptr<int> p2(p1); // ref count:

  return EXIT_SUCCESS;
}
```

- Smart pointers can't tell if you are re-using a raw pointer.
  - Takeaway: be careful!!!!
  - Safer to use cctor
  - To be extra safe, don't have a raw pointer variable!

Lecture Summary

- A `unique_ptr` ***takes ownership*** of a pointer
  - Cannot be copied, but can be moved
  - **`get`**`()` returns a copy of the pointer, but is dangerous to use; better to use **`release`**`()` instead
  - **`reset`**`()` `delete`s old pointer value and stores a new one
- A `shared_ptr` allows shared objects to have multiple owners by doing *reference counting*
  - `delete`s an object once its reference count reaches zero
- A `weak_ptr` works with a shared object but doesn't affect the reference count
  - Can't actually be dereferenced, but can check if the object still exists and can get a `shared_ptr` from the `weak_ptr` if it does

Some Important Smart Pointer Methods

Visit http://www.cplusplus.com/ for more information on these!

- `std::unique_ptr U;`
  - `U.get()` Returns the raw pointer U is managing
  - `U.release()` U stops managing its raw pointer and returns the raw pointer
  - `U.reset(q)` U cleans up its raw pointer and takes ownership of q
- `std::shared_ptr S;`
  - `S.get()` Returns the raw pointer S is managing
  - `S.use_count()` Returns the reference count
  - `S.unique()` Returns true iff S.use_count() == 1
- `std::weak_ptr W;`
  - `W.lock()` Constructs a shared pointer based off of W and returns it
  - `W.use_count()` Returns the reference count
  - `W.expired()` Returns true iff W is expired (W.use_count() == 0)