C++ Smart Pointers

CSE 333 Spring 2019

Guest Instructor: Aaron Johnston

Teaching Assistants:

Aaron Johnston, Andrew Hu, Daniel Snitkovskiy, Forrest Timour, Kevin Bi, Kory Watson, Pat Kosakanchit, Renshu Gu, Tarkan Al-Kazily, Travis McGaha

Administrivia

- Exercise 12a released today, due Wednesday
  - Practice using `map`
- Midterm is Friday (5/10) @ 5–6:10 pm in KNE 130
  - No lecture on Friday!
  - 1 double-sided page of handwritten notes; reference sheet provided on exam
  - **Topics:** everything from lecture, exercises, project, etc. up to C++ templates (and up through HW2)
  - Old exams on course website, review in section this week

Lecture Outline

- Smart Pointers
  - `std::unique_ptr`
  - Reference counting
  - `std::shared_ptr` and `std::weak_ptr`

Refresher: ToyPtr Class Template

ToyPtr.cc

```
#ifndef _TOYPTR_H_
#define _TOYPTR_H_

template <typename T> class ToyPtr {
 public:
  ToyPtr(T *ptr) : ptr_(ptr) { }     // constructor
  ~ToyPtr() { delete ptr_; }         // destructor

  T &operator*() { return *ptr_; }   // * operator
  T *operator->() { return ptr_; }   // -> operator

 private:
  T *ptr_;                           // the pointer itself
};

#endif  // _TOYPTR_H_
```

`std::unique_ptr`

- A `unique_ptr` ***takes ownership*** of a pointer
  - Part of C++'s standard library (C++11)
  - A template: template parameter is the type that the "owned" pointer references (*i.e.* the `T` in pointer type `T*`)
  - Its destructor invokes `delete` on the owned pointer
    - Invoked when `unique_ptr` object is `delete`'d or falls out of scope

Using unique_ptr

unique1.cc

```
#include <iostream>  // for std::cout, std::endl
#include <memory>    // for std::unique_ptr
#include <cstdlib>   // for EXIT_SUCCESS

void Leaky() {
  int *x = new int(5);  // heap-allocated
  (*x)++;
  std::cout << *x << std::endl;
}  // never used delete, therefore leak

void NotLeaky() {
  std::unique_ptr<int> x(new int(5));  // wrapped, heap-allocated
  (*x)++;
  std::cout << *x << std::endl;
}  // never used delete, but no leak

int main(int argc, char **argv) {
  Leaky();
  NotLeaky();
  return EXIT_SUCCESS;
}
```

Why are `unique_ptr`s useful?

- If you have many potential exits out of a function, it's easy to forget to call `delete` on all of them
  - `unique_ptr` will `delete` its pointer when it falls out of scope
  - Thus, a `unique_ptr` also helps with *exception safety*

```
void NotLeaky() {
  std::unique_ptr<int> x(new int(5));
  ...
  // lots of code, including several returns
  // lots of code, including potential exception throws
  ...
}
```

unique_ptr Operations

unique2.cc

```
#include <memory>   // for std::unique_ptr
#include <cstdlib>  // for EXIT_SUCCESS

using namespace std;
typedef struct { int a, b; } IntPair;

int main(int argc, char **argv) {
  unique_ptr<int> x(new int(5));

  int *ptr = x.get(); // Return a pointer to pointed-to object
  int val = *x;       // Return the value of pointed-to object

  // Access a field or function of a pointed-to object
  unique_ptr<IntPair> ip(new IntPair);
  ip->a = 100;

  // Deallocate current pointed-to object and store new pointer
  x.reset(new int(1));

  ptr = x.release();  // Release responsibility for freeing
  delete ptr;
  return EXIT_SUCCESS;
}
```

unique_ptrs Cannot Be Copied

- std::unique_ptr has disabled its copy constructor and assignment operator
  - You cannot copy a unique_ptr, helping maintain "uniqueness" or "ownership"

uniquefail.cc

```
#include <memory>   // for std::unique_ptr
#include <cstdlib>  // for EXIT_SUCCESS

int main(int argc, char **argv) {
  std::unique_ptr<int> x(new int(5));  //

  std::unique_ptr<int> y(x);           //

  std::unique_ptr<int> z;              //

  z = x;                               //

  return EXIT_SUCCESS;
}
```

Transferring Ownership

- Use **reset**() and **release**() to transfer ownership
  - **release** returns the pointer, sets wrapped pointer to `nullptr`
  - **reset** `delete`'s the current pointer and stores a new one

unique3.cc

```
int main(int argc, char **argv) {
  unique_ptr<int> x(new int(5));
  cout << "x: " << x.get() << endl;

  unique_ptr<int> y(x.release());  // x abdicates ownership to y
  cout << "x: " << x.get() << endl;
  cout << "y: " << y.get() << endl;

  unique_ptr<int> z(new int(10));

  // y transfers ownership of its pointer to z.
  // z's old pointer was delete'd in the process.
  z.reset(y.release());

  return EXIT_SUCCESS;
}
```

`unique_ptr` and STL

- `unique_ptr`s *can* be stored in STL containers
  - Wait, what? STL containers like to make lots of copies of stored objects and `unique_ptr`s cannot be copied…
- Move semantics to the rescue!
  - When supported, STL containers will *move* rather than *copy*
    - `unique_ptr`s support move semantics

Aside: Copy Semantics

- Assigning values typically means making a copy
  - Sometimes this is what you want
    - *e.g.* assigning a string to another makes a copy of its value
  - Sometimes this is wasteful
    - *e.g.* assigning a returned string goes through a temporary copy

copysemantics.cc

```
std::string ReturnFoo(void) {
  std::string x("foo");
  return x;  // this return might copy
}

int main(int argc, char **argv) {
  std::string a("hello");
  std::string b(a);  // copy a into b

  b = ReturnFoo();   // copy return value into b

  return EXIT_SUCCESS;
}
```

Aside: Move Semantics (C++11)

- "Move semantics" move values from one object to another without copying ("stealing")
  - Useful for optimizing away temporary copies
  - A complex topic that uses things called "*rvalue references*"
    - Mostly beyond the scope of 333 this quarter

movesemantics.cc

```
std::string ReturnFoo(void) {
  std::string x("foo");
  // this return might copy
  return x;
}

int main(int argc, char **argv) {
  std::string a("hello");

  // moves a to b
  std::string b = std::move(a);
  std::cout << "a: " << a << std::endl;
  std::cout << "b: " << b << std::endl;

  // moves the returned value into b
  b = std::move(ReturnFoo());
  std::cout << "b: " << b << std::endl;

  return EXIT_SUCCESS;
}
```

Transferring Ownership via Move

- `unique_ptr` supports move semantics
  - Can "move" ownership from one `unique_ptr` to another
    - Behavior is equivalent to the "release-and-reset" combination

unique4.cc

```
int main(int argc, char **argv) {
  unique_ptr<int> x(new int(5));
  cout << "x: " << x.get() << endl;

  unique_ptr<int> y = std::move(x); // x abdicates ownership to y
  cout << "x: " << x.get() << endl;
  cout << "y: " << y.get() << endl;

  unique_ptr<int> z(new int(10));

  // y transfers ownership of its pointer to z.
  // z's old pointer was delete'd in the process.
  z = std::move(y);

  return EXIT_SUCCESS;
}
```

unique_ptr and STL Example

uniquevec.cc

```
int main(int argc, char **argv) {
  std::vector<std::unique_ptr<int> > vec;

  vec.push_back(std::unique_ptr<int>(new int(9)));
  vec.push_back(std::unique_ptr<int>(new int(5)));
  vec.push_back(std::unique_ptr<int>(new int(7)));

  //
  int z = *vec[1];
  std::cout << "z is: " << z << std::endl;

  //
  std::unique_ptr<int> copied = vec[1];

  //
  std::unique_ptr<int> moved = std::move(vec[1]);
  std::cout << "*moved: " << *moved << std::endl;
  std::cout << "vec[1].get(): " << vec[1].get() << std::endl;

  return EXIT_SUCCESS;
}
```

`unique_ptr` and "<"

- A `unique_ptr` implements some comparison operators, including `operator<`
  - However, it doesn't invoke `operator<` on the pointed-to objects
    - Instead, it just promises a stable, strict ordering (probably based on the pointer address, not the pointed-to-value)
  - So to use `sort()` on `vector`s, you want to provide it with a comparison function

unique_ptr and STL Sorting

uniquevecsort.cc

```
using namespace std;
bool sortfunction(const unique_ptr<int> &x,
                  const unique_ptr<int> &y) { return *x < *y; }
void printfunction(unique_ptr<int> &x) { cout << *x << endl; }

int main(int argc, char **argv) {
  vector<unique_ptr<int> > vec;
  vec.push_back(unique_ptr<int>(new int(9)));
  vec.push_back(unique_ptr<int>(new int(5)));
  vec.push_back(unique_ptr<int>(new int(7)));

  // buggy: sorts based on the values of the ptrs
  sort(vec.begin(), vec.end());
  cout << "Sorted:" << endl;
  for_each(vec.begin(), vec.end(), &printfunction);

  // better: sorts based on the pointed-to values
  sort(vec.begin(), vec.end(), &sortfunction);
  cout << "Sorted:" << endl;
  for_each(vec.begin(), vec.end(), &printfunction);

  return EXIT_SUCCESS;
}
```

unique_ptr, "<", and maps

- Similarly, you can use `unique_ptr`s as keys in a `map`
  - Reminder: a `map` internally stores keys in sorted order
    - Iterating through the `map` iterates through the keys in order
  - By default, "<" is used to enforce ordering
    - You must specify a comparator when *constructing* the `map` to get a meaningful sorted order using "<" of `unique_ptr`s

- Compare (the 3rd template) parameter:
  - "A binary predicate that takes two element *keys* as arguments and returns a `bool`. This can be a <u>function pointer</u> or a <u>function object</u>."
    - `bool fptr(T1& lhs, T1& rhs);` OR member function `bool operator() (const T1& lhs, const T1& rhs);`

unique_ptr and map Example

uniquemap.cc

```
struct MapComp {
  bool operator()(const unique_ptr<int> &lhs,
        const unique_ptr<int> &rhs) const { return *lhs < *rhs; }
};

int main(int argc, char **argv) {
  map<unique_ptr<int>, int, MapComp> a_map;  // Create the map

  unique_ptr<int> a(new int(5));  // unique_ptr for key
  unique_ptr<int> b(new int(9));
  unique_ptr<int> c(new int(7));

  a_map[std::move(a)] = 25;  // move semantics to get ownership
  a_map[std::move(b)] = 81;  // of unique_ptrs into the map.
  a_map[std::move(c)] = 49;  // a, b, c hold NULL after this.

  map<unique_ptr<int>,int>::iterator it;
  for (it = a_map.begin(); it != a_map.end(); it++) {
    std::cout << "key: " << *(it->first);
    std::cout << " value: " << it->second << std::endl;
  }
  return EXIT_SUCCESS;
}
```

unique_ptr and Arrays

- unique_ptr can store arrays as well
  - Will call delete[] on destruction

unique5.cc

```
#include <memory>   // for std::unique_ptr
#include <cstdlib>  // for EXIT_SUCCESS

using namespace std;

int main(int argc, char **argv) {
  unique_ptr<int[]> x(new int[5]);

  x[0] = 1;
  x[2] = 2;

  return EXIT_SUCCESS;
}
```

Reference Counting

- Reference counting is a technique for managing resources by counting and storing the number of references (*i.e.* pointers that hold the address) to an object

std::shared_ptr

- shared_ptr is similar to unique_ptr but we allow shared objects to have multiple owners
  - The copy/assign operators are not disabled and *increment* or *decrement* reference counts as needed
    - After a copy/assign, the two shared_ptr objects point to the same pointed-to object and the (shared) reference count is 2
  - When a shared_ptr is destroyed, the reference count is *decremented*
    - When the reference count hits 0, we delete the pointed-to object!

shared_ptr Example

sharedexample.cc

```
#include <cstdlib>    // for EXIT_SUCCESS
#include <iostream>   // for std::cout, std::endl
#include <memory>     // for std::shared_ptr

int main(int argc, char **argv) {
  std::shared_ptr<int> x(new int(10));  // ref count:

  // temporary inner scope (!)
  {
    std::shared_ptr<int> y = x;         // ref count:
    std::cout << *y << std::endl;
  }

  std::cout << *x << std::endl;         // ref count:

  return EXIT_SUCCESS;
}                                       // ref count:
```

shared_ptrs and STL Containers

- Even simpler than unique_ptrs
  - Safe to store shared_ptrs in containers, since copy/assign maintain a shared reference count

sharedvec.cc

```
vector<std::shared_ptr<int> > vec;

vec.push_back(std::shared_ptr<int>(new int(9)));
vec.push_back(std::shared_ptr<int>(new int(5)));
vec.push_back(std::shared_ptr<int>(new int(7)));

int &z = *vec[1];
std::cout << "z is: " << z << std::endl;

std::shared_ptr<int> copied = vec[1];  // works!
std::cout << "*copied: " << *copied << std::endl;

std::shared_ptr<int> moved = std::move(vec[1]);  // works!
std::cout << "*moved: " << *moved << std::endl;
std::cout << "vec[1].get(): " << vec[1].get() << std::endl;
```

Cycle of shared_ptrs

strongcycle.cc

```
#include <cstdlib>
#include <memory>

using std::shared_ptr;

struct A {
  shared_ptr<A> next;
  shared_ptr<A> prev;
};

int main(int argc, char **argv) {
  shared_ptr<A> head(new A());
  head->next = shared_ptr<A>(new A());
  head->next->prev = head;

  return EXIT_SUCCESS;
}
```

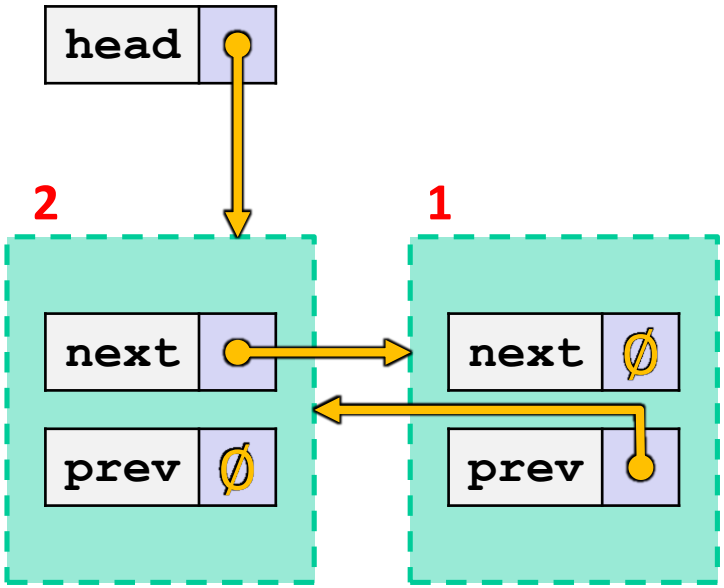

- What happens when we `delete head`?

std::weak_ptr

- weak_ptr is similar to a shared_ptr but doesn't affect the reference count
  - Can *only* "point to" an object that is managed by a shared_ptr
  - Not *really* a pointer – can't actually dereference unless you "get" its associated shared_ptr
  - Because it doesn't influence the reference count, weak_ptrs can become "*dangling*"
    - Object referenced may have been delete'd
    - But you can check to see if the object still exists
- Can be used to break our cycle problem!

Breaking the Cycle with `weak_ptr`

weakcycle.cc

```
#include <cstdlib>
#include <memory>

using std::shared_ptr;
using std::weak_ptr;

struct A {
  shared_ptr<A> next;
  weak_ptr<A> prev;
};

int main(int argc, char **argv) {
  shared_ptr<A> head(new A());
  head->next = shared_ptr<A>(new A());
  head->next->prev = head;

  return EXIT_SUCCESS;
}
```

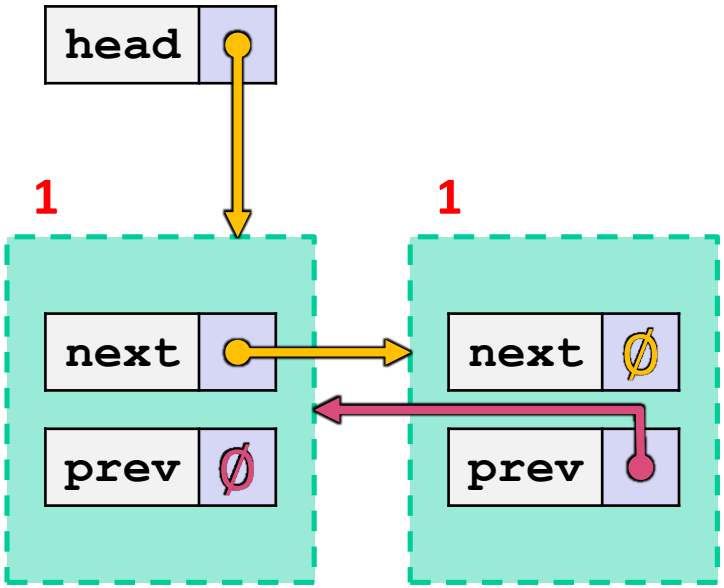

- Now what happens when we `delete head`?

Using a weak_ptr

usingweak.cc

```
#include <cstdlib>    // for EXIT_SUCCESS
#include <iostream>   // for std::cout, std::endl
#include <memory>     // for std::shared_ptr, std::weak_ptr

int main(int argc, char **argv) {
  std::weak_ptr<int> w;

  {  // temporary inner scope
    std::shared_ptr<int> x;
    {  // temporary inner-inner scope
      std::shared_ptr<int> y(new int(10));
      w = y;
      x = w.lock();  // returns "promoted" shared_ptr
      std::cout << *x << std::endl;
    }
    std::cout << *x << std::endl;
  }
  std::shared_ptr<int> a = w.lock();
  std::cout << a << std::endl;

  return EXIT_SUCCESS;
}
```

Summary

- A `unique_ptr` ***takes ownership*** of a pointer
  - Cannot be copied, but can be moved
  - **`get`**`()` returns a copy of the pointer, but is dangerous to use; better to use **`release`**`()` instead
  - **`reset`**`()` `delete`s old pointer value and stores a new one
- A `shared_ptr` allows shared objects to have multiple owners by doing *reference counting*
  - `delete`s an object once its reference count reaches zero
- A `weak_ptr` works with a shared object but doesn't affect the reference count
  - Can't actually be dereferenced, but can check if the object still exists and can get a `shared_ptr` from the `weak_ptr` if it does