CSE 333

Lecture 15 - inheritance

Hal Perkins

Department of Computer Science & Engineering

University of Washington

Administrivia

HW3 due a week from Thursday - how's it look?

- Section tomorrow: HW3 debugging disk files & more!

New exercise out, due Friday morning (STL maps)

Following exercise is about subclasses and will be out Friday, due Monday morning

Midterm grading still in process - should finish in a day or two

- Using gradescope (online grading and return)
- You'll get mail from us and gradescope when ready
  - Log on to gradescope with your @uw email address

HW3 tip

HW3 writes some pretty big index files

- Hundreds of thousands of write operations
- No problem for today's fast machines and disks!!

Except...

- If you're running on attu or a CSE lab linux workstation, every write to your personal directories goes to a network file server(!)
  - ∴ Lots of slow network packets vs full-speed disks — can take much longer to write an index to a server vs. a few sec. locally (!!)
  - Suggestion: write index files to /tmp/... . That's a local scratch disk and is very fast. But please clean up when you're done.

Today

C++ inheritance

- Review of basic idea (pretty much the same as 143)
- What's different in C++ (compared to Java)
  - *Static vs dynamic dispatch - virtual functions and vtables*
  - *Pure virtual functions, abstract classes, why no Java "interfaces"*
  - *Assignment slicing, using class hierarchies with STL*
- Casts in C++
- Reference: C++ Primer, ch. 15
  - Credits: Thanks to Marty Stepp for stock portfolio example

Let's build a stock portfolio

A portfolio represents a person's financial investments

- each asset has a cost (how much was paid for it) and a market value (how much it is worth)
  - the difference is the profit (or loss)
- different assets compute market value in different ways
  - **stock**: has a symbol ("GOOG"), a number of shares, share price paid, and current share price
  - **dividend stock**: is a stock that also has dividend payments
  - **cash:** money; never incurs profit or loss. (hah!)

One possible design

Stock
symbol_ total_shares_ total_cost_ current_price_
GetMarketValue( ) GetProfit( ) GetCost( )

DividendStock
symbol_ total_shares_ total_cost_ current_price_ dividends_
GetMarketValue( ) GetProfit( ) GetCost( )

Cash
amount_
GetMarketValue( )

One class per asset type

- Problem: redundancy
- Problem: cannot treat multiple investments the same way
  - e.g., cannot put them in a single array or Vector

see initial_design/

Inheritance

A parent-child "is-a" relationship between classes

- a child (**derived** class) extends a parent (**base** class)

Benefits:

- code reuse: subclasses inherit code from superclasses
- polymorphism
  - ability to redefine existing behavior but preserve the interface
  - children can override behavior of parent
  - others can make calls on objects without knowing which part of the inheritance tree it is in
- extensibility: children can add behavior

Better design

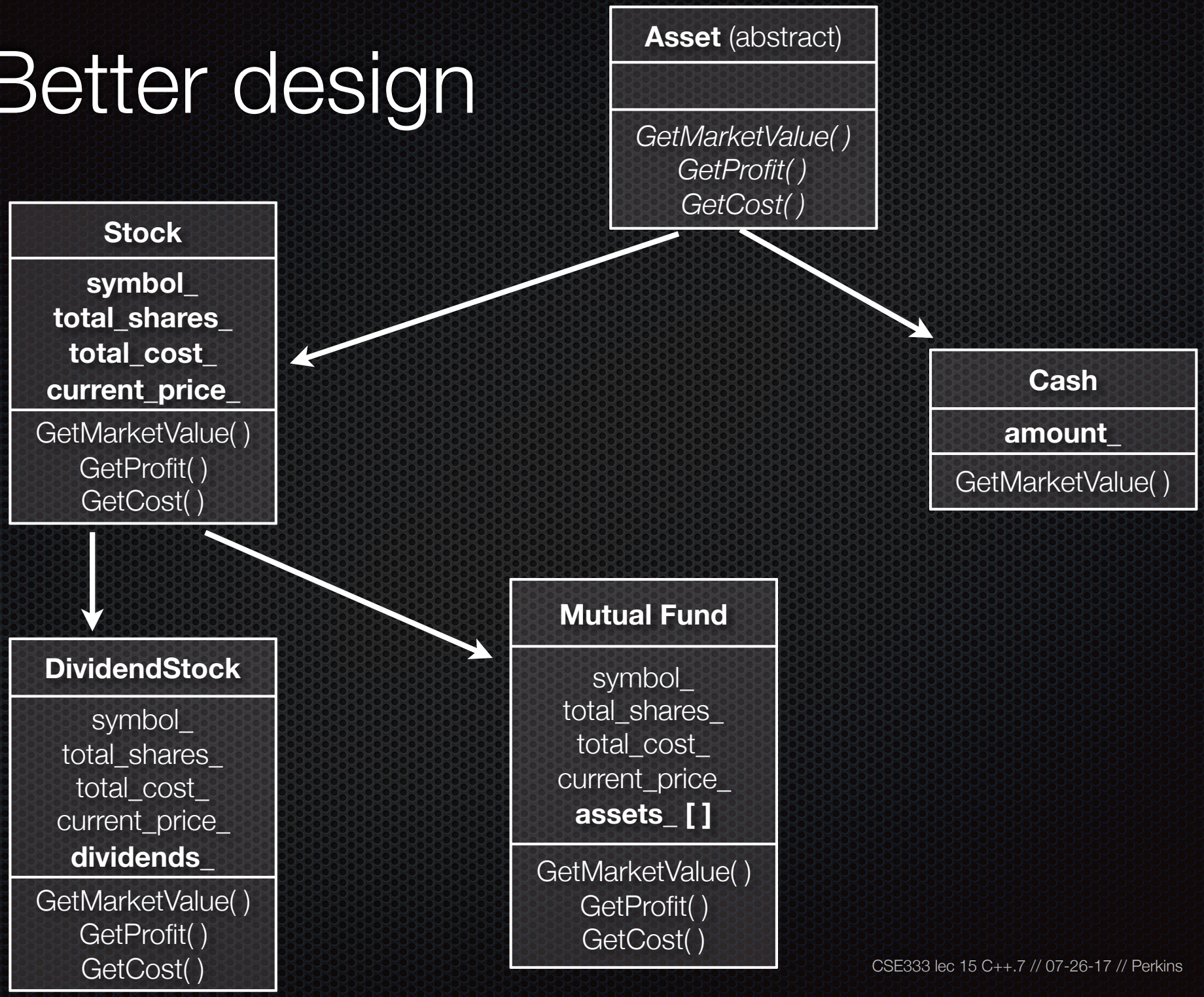

Like Java: Access specifiers

public: visible to all other classes

protected: visible to current class and its subclasses

private: visible only to the current class

declare members as **protected** if:

- you don't want random clients accessing them, but...
  - you want to be subclassed and let subclasses access them

Like Java: Public inheritance

```
#include "BaseClass.h"

class Name : public BaseClass {
  ...
};
```

- "public" inheritance
  - anything that is [*public, protected*] in the base is [*public, protected*] in the derived class - this is interface (specification) + implementation inheritance
- derived class inherits **almost** all behavior from the base class
  - not constructors and destructors
  - not the assignment operator or copy constructor
- (Yes there is "private" inheritance — don't ask and don't use)

Terminology

C++, etc.	**Java, etc.**
base class	*superclass*
derived class	*subclass*

Means the same. You'll hear both.

Revisiting the portfolio example

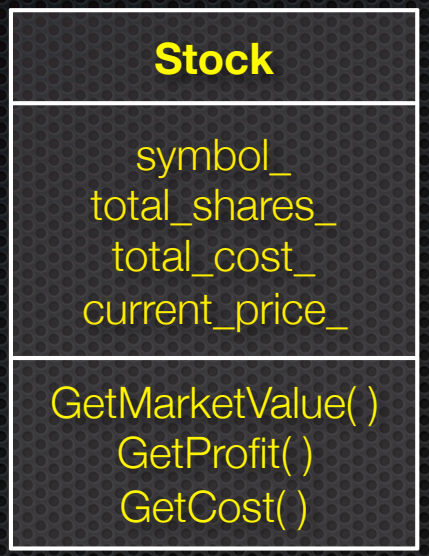

Without inheritance (separate class per type)

- lots of redundancy
- no type relationship between the classes

Revisiting the portfolio example

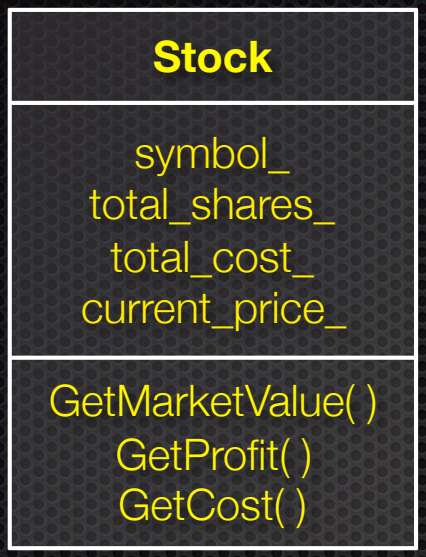

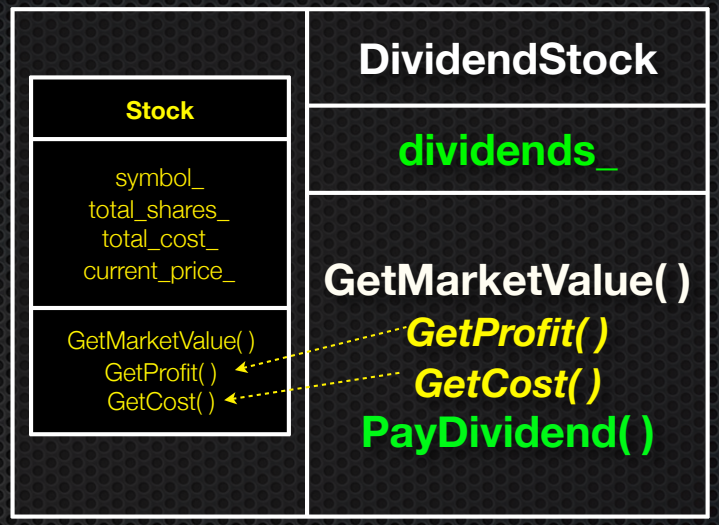

A derived class:

- ***inherits*** the behavior and state of the base class
- **overrides** some of the base class's member functions
- **extends** the base class with new member functions, variables

(implement better_design/)

Like Java: Dynamic dispatch

Usually, when a derived function is available to an object, we want that derived function to be invoked by it

- as we will see, this requires a runtime decision of what code to invoke

When a member function is invoked on an object...

- the code that is invoked is decided at run time, and is the **most-derived function** accessible to the object's visible type

How to use dynamic dispatch

If you want a member function to use dynamic dispatch, prefix its declaration with the "virtual" keyword

- derived (child) functions don't need to repeat the virtual keyword, but it traditionally has been good style to do so
- "override" added in C++ 11 - always use if it's available
  - "virtual" + "override"? Be consistent; follow local conventions - trend is to use override only; virtual is redundant (but old code and some of ours uses both)
- This is how method calls work in Java (all normal methods are virtual; no "virtual" keyword needed)

(see even_better_design/)

Dynamic dispatch

When a member function is invoked on an object

- the code that is invoked is decided at run time, and is the **most-derived function** accessible to the object's visible type

```
double DividendStock::GetMarketValue() const {
  return get_shares() * get_share_price() + _dividends;
}

double DividendStock::GetProfit() const {
  return DividendStock::GetMarketValue() - GetCost();
}
```

DividendStock.cc

```
double Stock::GetMarketValue() const {
  return get_shares() * get_share_price();
}

double Stock::GetProfit() const {
  return GetMarketValue() - GetCost();
}
```

Stock.cc

Dynamic dispatch

```
DividendStock dividend();

DividendStock *ds = &dividend;
Stock *s = &dividend;

// invokes Stock::GetProfit(), since that function is
// inherited (i.e, not overridden).  Stock::GetProfit()
// invokes Dividend::GetMarketValue(), since that is
// the most-derived accessible function.
ds->GetProfit();

// invokes DividendStock::GetMarketValue()
ds->GetMarketValue();

// invokes DividendStock::GetMarketValue()
s->GetMarketValue();
```

Dynamic dispatch

Here's what "most derived" means:

```
class A {
 public:
  // Foo will use dynamic dispatch
  virtual void Foo();
};

class B : public A {
 public:
  // B::Foo overrides A::Foo
  virtual void Foo();
};

class C : public B {
 public:
  // C inherits B::Foo()
};
```

```
void function() {
  A *a_ptr;
  C c;

  // Why is this OK?
  a_ptr = &c;

  // Whose Foo() is called?
  a_ptr->Foo();
}
```

Dynamic dispatch

```
class A {
 public:
  virtual void Foo();
};

class B : public A {
 public:
  virtual void Foo();
};

class C : public B {
};

class D : public C {
 public:
  virtual void Foo();
};

class E : public C {
};
```

A more extreme version

```
void function() {
  A *a_ptr;
  C c;
  E e;

  // Whose Foo() is called?
  a_ptr = &c;
  a_ptr->Foo();

  // Whose Foo() is called?
  a_ptr = &e;
  a_ptr->Foo();
}
```

But how can this possibly work??

The compiler produces Stock.o from Stock.cc

- while doing this, it can't know that DividendStock exists
  - so, how does the code emitted for Stock::GetProfit( ) know to invoke Stock::GetMarketValue( ) some of the time, and DividendStock::GetMarketValue( ) other times???!?

```
virtual double Stock::GetMarketValue() const;

virtual double Stock::GetProfit() const;
```

Stock.h

```
double Stock::GetMarketValue() const {
  return get_shares() * get_share_price();
}

double Stock::GetProfit() const {
  return GetMarketValue() - GetCost();
}
```

Stock.cc

vtables and the vptr

If a member function is virtual, the compiler emits:

- a “vtable”, or virtual function table, **for the class**
  - it contains an function pointer for each virtual function in the class
  - the pointer points to the most-derived function for that class
- a “vptr”, or virtual table pointer, **for each object instance**
  - the vptr is a pointer to a virtual table, and it is essentially a hidden member variable inserted by the compiler
  - when the object’s constructor is invoked, the vptr is initialized to point to the virtual table for the object’s class
  - thus, the vptr “remembers” what class the object is

vtable/vptr example

```
class Base {
 public:
  virtual void fn1() {};
  virtual void fn2() {};
};

class Dr1: public Base {
 public:
  virtual void fn1() {};
};

class Dr2: public Base {
 public:
  virtual void fn2() {};
};
```

```
// what needs to work

Base b;
Dr1  d1;
Dr2  d2;

Base *bptr = &b;
Base *d1ptr = &d1;
Base *d2ptr = &d2;

bptr->fn1();    // Base::fn1()
bptr->fn2();    // Base::fn2()

d1ptr->fn1();   // Dr1::fn1();
d1ptr->fn2();   // Base::fn2();

d2.fn1();       // Base::fn1();
d2ptr->fn1();   // Base::fn1();
d2ptr->fn2();   // Dr2::fn2();
```

vtable/vptr example

```
// what happens

Base b;
Dr1  d1;
Dr2  d2;

Base *d2ptr = &d2;

d2.fn1();
// d2.vptr -->
// Dr2.vtable.fn1 -->
// Base::fn1()


d2ptr->fn2();
// d2ptr -->
// d2.vptr -->
// Dr2.vtable.fn2 ->
// Dr2::fn2()
```

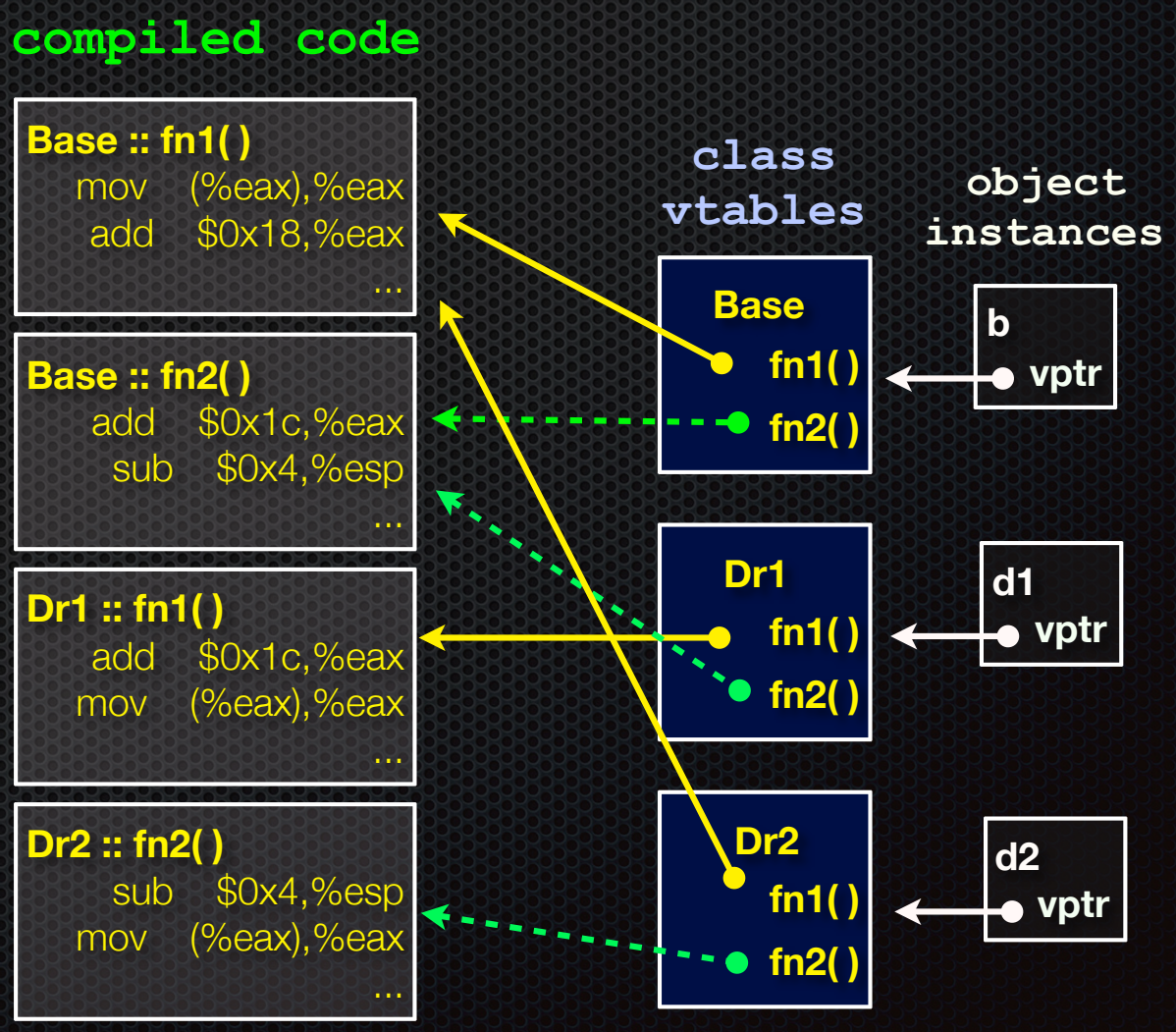

actual code

```
class Base {
 public:
  virtual void fn1() {};
  virtual void fn2() {};
};

class Dr1: public Base {
 public:
  virtual void fn1() {};
};

main() {
 Dr1   d1;
 d1.fn1();
 Base *ptr = &d1;
 ptr->fn1();
}
```

vtable.cc

Let's compile this and use objdump to see what g++ emits!

- g++ -g vtable.cc
- objdump -CDSRTtx a.out | less

Static dispatch - What if we omit “virtual”?

When a member function is invoked on an object...

- the code that is invoked is decided at compile time, based on the compile-time visible type of the callee

```
double DividendStock::GetMarketValue() const {
  return get_shares() * get_share_price() + _dividends;
}

double DividendStock::GetProfit() const {
  return GetMarketValue() - GetCost();
}
```

DividendStock.cc

```
double Stock::GetMarketValue() const {
  return get_shares() * get_share_price();
}

double Stock::GetProfit() const {
  return GetMarketValue() - GetCost();
}
```

Stock.cc

Static dispatch

```
DividendStock dividend();

DividendStock *ds = &dividend;
Stock *s = &dividend;

// invokes Stock::GetProfit(), since that function is
// inherited (i.e, not overridden).  Stock::GetProfit()
// invokes Stock::GetMarketValue(), since C++ uses
// static dispatch by default.
ds->GetProfit();

// invokes DividendStock::GetMarketValue()
ds->GetMarketValue();

// invokes Stock::GetMarketValue()
s->GetMarketValue();
```

Why not always use “virtual”?

Two (fairly uncommon) reasons:

- Efficiency:
  - non-virtual function calls are a tiny bit faster (no indirect lookup)
  - if the class has no virtual functions, objects will not have a vptr field
- Control: If `f()` calls `g()` in class `X` and `g` is not virtual, we’re guaranteed to call `X::g()` and not `g()` in some subclass
  - Particularly useful for framework design

In Java, all functions (methods) are virtual (exception: static class methods, but these aren’t associated with objects — no “this” ptr)

In C++ and C# you can pick what you want

- But omitting “virtual” often causes obscure bugs

Virtual is “sticky”

If `X::f()` is declared virtual, then a vtable will be created for class `X` and for all of its subclasses. The vtables will include function pointers for (the correct version of) `f`.

`f()` will be called using dynamic dispatch even if overridden but not explicitly specified as `virtual` in a subclass

- But it’s good style to help the reader by using override (and, particularly in older code, virtual) in subclasses

Pure virtual fcns, abstract classes

Sometimes we want to include a function in a class but only implement it in subclasses. In Java we would use an abstract method. In C++ we use a "pure virtual" function.

- Example: `virtual string noise() = 0;` // see zoo.cc

A class that contains a pure virtual method is abstract

- Can't create instances of an abstract class (like Java)
- Extend abstract classes and override methods to use them (like Java)

A class containing *only* pure virtual methods is the same as a Java interface (∴ no separate "interface" thingys in C++)

- Pure type specification without implementations

Inheritance and constructors

A derived class **does not inherit** the base class's constructor

- the derived class ***must*** have its own constructor
  - if you don't provide one, C++ synthesizes a default constructor for you
    - it initializes derived class's non-POD member variables to zero-equivalents and invokes the default constructor of the base class
    - if the base class has no default constructor, a compiler error
- a constructor of the base class is invoked before the constructor of the derived class
  - you can specify which base class constructor in the initialization list of the derived class, or C++ will invoke default constructor of base class

Examples

```
// Base has no default constructor
class Base {
 public:
  Base(int x) : y(x) { }
  int y;
};

// Compiler error when you try
// to instantiate a D1, as D1's
// synthesized default constructor
// needs to invoke Base's default
// constructor.
class D1 : public Base {
 public:
  int z;
};

// Works.
class D2 : public Base {
 public:
  D2(int z) : Base(z+1) {
   this->z = z;
  }
  int z;
};
```

badcons.cc

```
// Base has a default constructor.
class Base {
 public:
  int y;
};

// Works.
class D1 : public Base {
 public:
  int z;
};

// Works.
class D2 : public Base {
 public:
  D2(int z) {
   this->z = z;
  }
  int z;
};
```

goodcons.cc

Destructors

When the destructor of a derived class is invoked...

- the destructor of the base class is invoked after the destructor of the derived class finishes

Note that static dispatch of destructors is almost always a mistake!

- good habit to always define a destructor as virtual
  - empty if you have no work to do

baddestruct.cc

```
class Base {
 public:
  Base() { x = new int; }
  ~Base() { delete x; }
  int *x;
};

class D1 : public Base {
 public:
  D1() { y = new int; }
  ~D1() { delete y; }
  int *y;
};

Base *b = new Base;
Base *dptr = (Base *) new D1;

delete b;    // ok
delete dptr; // leaks D1::y
```

Slicing -- C++'s revenge

C++ allows you to...

- assign to...
  - an instance of a base class...
  - ...the value of a derived class

slicing.cc

```
class Base {
 public:
  Base(int x) : x_(x) { }
  int x_;
};

class Dr : public Base {
 public:
  Dr(int y) : Base(16), y_(y) { }
  int y_;
};

main() {
  Base b(1);
  Dr d(2);
  b = d;     // what happens to y_?
  // d = b; // compiler error
}
```

Given this, STL containers?? :(

STL stores **copies of values** in containers, not pointers to object instances

- so, what if you have a class hierarchy, and want to store mixes of object types in a single container?
  - e.g., Stock and DividendStock in the same list
- you get sliced! :(

```
class Stock {
  ...
};

class DivStock : public Stock {
  ...
};

main() {
  Stock        s;
  DivStock    ds;
  list<Stock> li;

  l.push_back(s);   // OK
  l.push_back(ds);  // OUCH!
}
```

STL + inheritance: use pointers?

Store pointers to heap-allocated objects in STL containers

- no slicing :)
  - you have to remember to delete your objects before destroying the container :(
  - sort( ) does the wrong thing :(:(

Use smart pointers!

```
#include <list>
using namespace std;

class Integer {
 public:
  Integer(int x) : x_(x) { }
 private:
  int x_;
};

main() {
  list<Integer *> li;
  Integer *i1 = new Integer(2);
  Integer *i2 = new Integer(3);

  li.push_back(i1);
  li.push_back(i2);
  li.sort();  // waaaaaah!!
}
```

Explicit casting in C

C's *explicit typecasting* syntax is simple

```
lhs = (new_type) rhs;
```

- C's explicit casting is used to...
  - convert between pointers of arbitrary type
  - forcibly convert a primitive type to another
    - e.g., an integer to a float, so that you can do integer division

```
int x = 5;
int y = 2;
printf("%d\n", x / y);              // prints 2
printf("%f\n", ((float) x) / y);    // prints 2.5
```

C++

You can use C-style casting in C++, but C++ provides an alternative style that is more informative

- static_cast<to_type>(expression)
- dynamic_cast<to_type>(expression)
- const_cast<to_type>(expression)
- reinterpret_cast<to_type>(expression)

Always use these in C++ code - helps document intent

static_cast

C++'s static_cast can convert:

- pointers to classes **of related type**
  - get a compiler error if you attempt to static_cast between pointers to non-related classes
  - dangerous to cast a pointer to a base class into a pointer to a derived class
- non-pointer conversion
  - float to int, etc.

static_cast is checked at compile time

staticcast.cc

```
class Foo {
 public:
  int x_;
};

class Bar {
 public:
  float x_;
};

class Wow : public Bar {
 public:
  char x_;
};

int main(int argc, char **argv) {
  Foo a, *aptr;
  Bar b, *bptr;
  Wow c, *cptr;

  // compiler error
  aptr = static_cast<Foo *>(&b);

  // OK
  bptr = static_cast<Bar *>(&c);

  // compiles, but dangerous
  cptr = static_cast<Wow *>(&b);
  return 0;
}
```

dynamic_cast

C++'s dynamic_cast can convert:

- pointers to classes of related type
- references to classes of related type

dynamic_cast is checked at both compile time and run time

- casts between unrelated classes fail at compile time
- casts from base to derived fail at run-time if the pointed-to object is not a full derived object
  - result is nullptr if cast fails

dynamiccast.cc

```
class Base {
 public:
  virtual int foo() { return 1; }
  float x_;
};

class Deriv : public Base {
 public:
  char x_;
};

int main(int argc, char **argv) {
  Base b, *bptr = &b;
  Deriv d, *dptr = &d;

  // OK (run-time check passes).
  bptr = dynamic_cast<Base *>(&d);
  assert(bptr != NULL);

  // OK (run-time check passes).
  dptr = dynamic_cast<Deriv *>(bptr);
  assert(dptr != NULL);

  // Run-time check fails, so the
  // cast returns NULL.
  bptr = &b;
  dptr = dynamic_cast<Deriv *>(bptr);
  assert(dptr != NULL);

  return 0;
}
```

const_cast

Is used to strip or add const-ness

- dangerous!

constcast.cc

```
void foo(int *x) {
  *x++;
}

void bar(const int *x) {
  foo(x);  // compiler error
  foo(const_cast<int *>(x));  // succeeds
}

main() {
  int x = 7;
  bar(&x);
}
```

reinterpret_cast

casts between incompatible types

- storing a pointer in an int, or vice-versa
  - works as long as the integral type is “wide” enough
- converting between incompatible pointers
  - dangerous!
    - But used (carefully) in HW3!!

Implicit conversion

The compiler tries to infer some kinds of conversions

- when you don't specify an explicit cast, and types are not equal, the compiler looks for an acceptable implicit conversion

```
void bar(std::string x);

void foo() {
  int x = 5.7;    // implicit conversion float -> int
  bar("hi");      // implicit conversion, (const char *) -> string
  char c = x;     // implicit conversion, int -> char
}
```

Sneaky implicit conversions

How did the (const char *) --> string conversion work??

- if a class has a constructor with a single parameter, the compiler will exploit it to perform implicit conversions
- at most one user-defined implicit conversion will happen
  - can do int --> Foo
  - can't do int --> Foo --> Baz

implicit.cc

```
class Foo {
 public:
  Foo(int x) : x_(x) { }
  int x_;
};

int Bar(Foo f) {
  return f.x_;
}

int main(int argc, char **argv) {
  // The compiler uses Foo's
  // (int x) constructor to make
  // an implicit conversion from
  // the int 5 to a Foo.


  // equiv to return Bar(Foo(5));
  // !!!
  return Bar(5);
}
```

Avoiding sneaky implicits

Declare one-argument constructors as "explicit" if you want to disable them from being used as an implicit conversion path

- usually a good idea

explicit.cc

```
class Foo {
 public:
  explicit Foo(int x) : x_(x) { }
  int x_;
};

int Bar(Foo f) {
  return f.x_;
}

int main(int argc, char **argv) {

  // compiler error
  return Bar(5);
}
```

Exercise 1

Design a class hierarchy to represent shapes:

- examples of shapes: Circle, Triangle, Square

Implement methods that:

- construct shapes
- move a shape (i.e., add (x, y) to the shape position)
- returns the centroid of the shape
- returns the area of the shape
- Print( ), which prints out the details of a shape

Exercise 2

Implement a program that:

- uses your exercise 1
  - constructs a vector of shapes
  - sorts the vector according to the area of the shape
  - prints out each member of the vector
- notes:
  - to avoid slicing, you'll have to store pointers in the vector
  - to be able to sort, you'll have to implement a wrapper for the pointers, and you'll have to override the "<" operator

See you on Monday!