cse 311: foundations of computing

Fall 2015

Lecture 24: DFAs, NFAs, and regular expressions

- FSMs with output at states
- State minimization

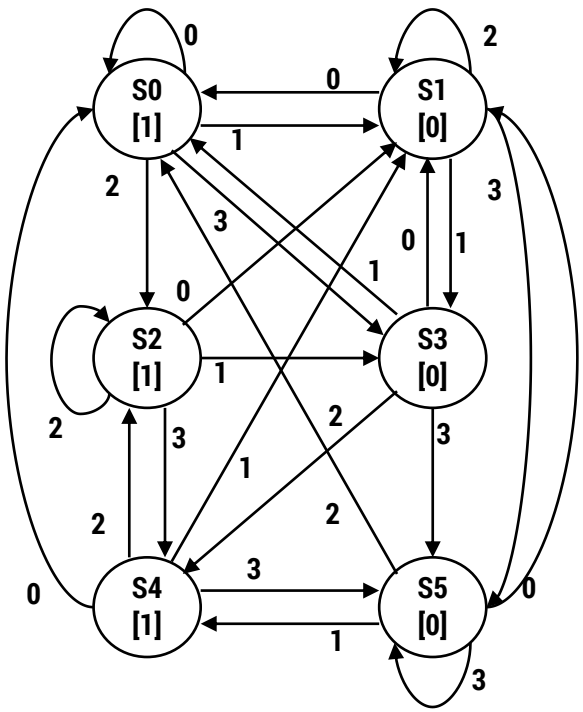

$\Rightarrow$

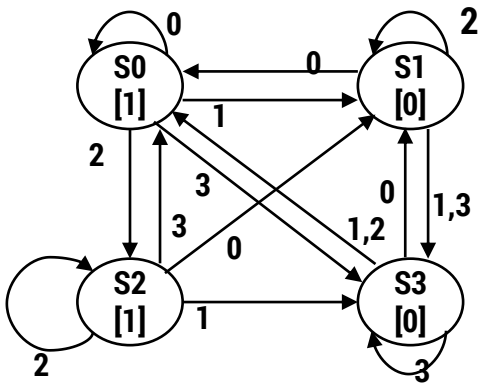

Lemma: The language recognized by a DFA is the set of strings x that label some path from its start state to one of its final states

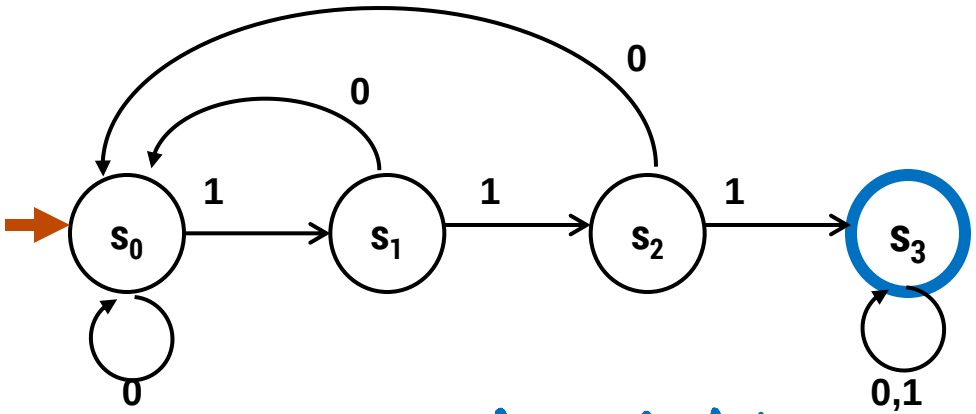

10111

nondeterministic finite automaton (NFA)

- Graph with start state, final states, edges labeled by symbols (like DFA) but
  - Not required to have exactly 1 edge out of each state labeled by each symbol--- can have 0 or >1
  - Also can have edges labeled by empty string ε
- **Definition:** x is in the language recognized by an NFA if and only if x labels a path from the start state to some final state

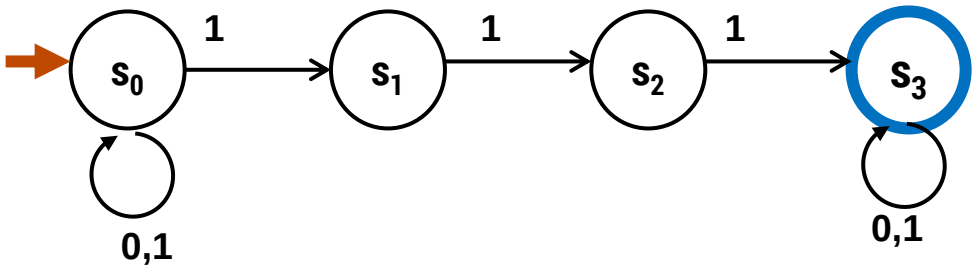

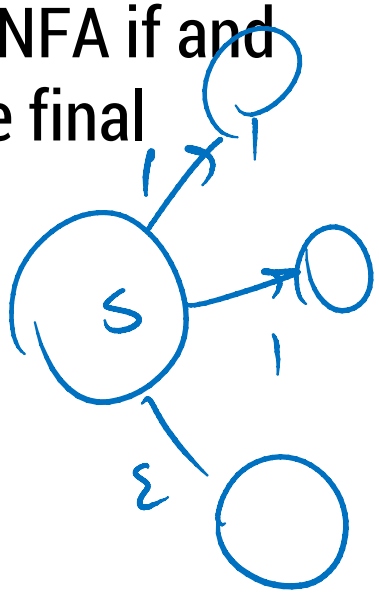

binary strings that have

- an even # of 1's
- or contain the substring 111 or 1000

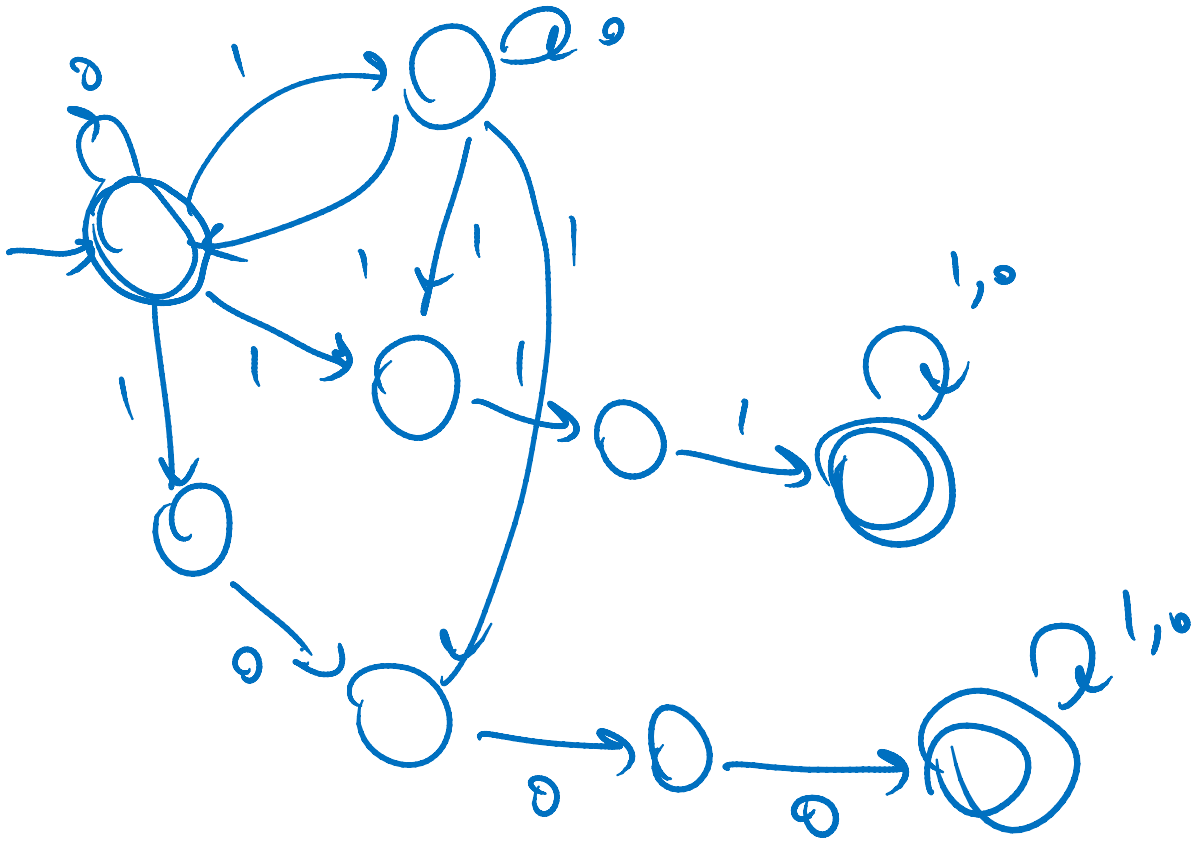

$\boxed{101110}$

Theorem: For any set of strings (language) A described by a regular expression, there is an NFA that recognizes A.

Proof idea: Structural induction based on the recursive definition of regular expressions...

$A \cup B$

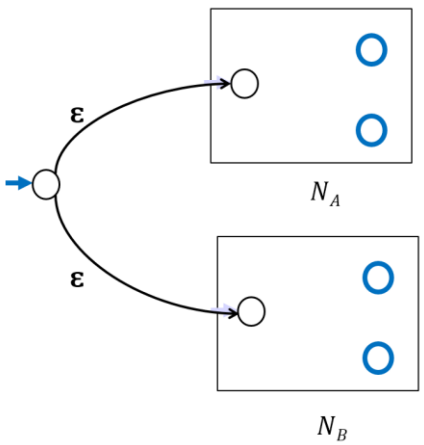

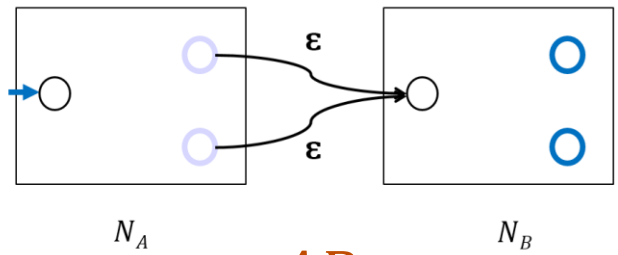

AB

A^*

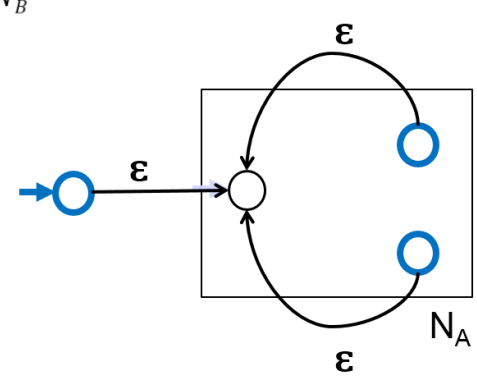

build an NFA for (01 ∪1)*0

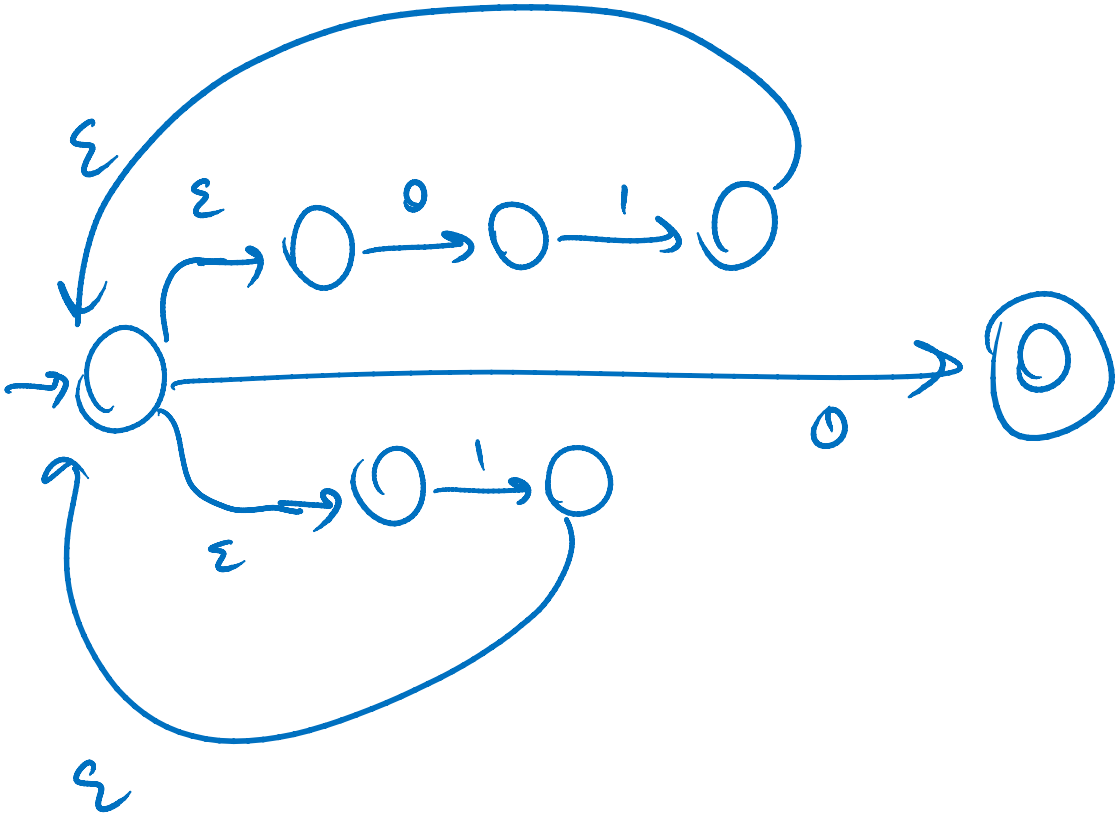

$(0|1|)*$

solution

(01 ∪1)*0

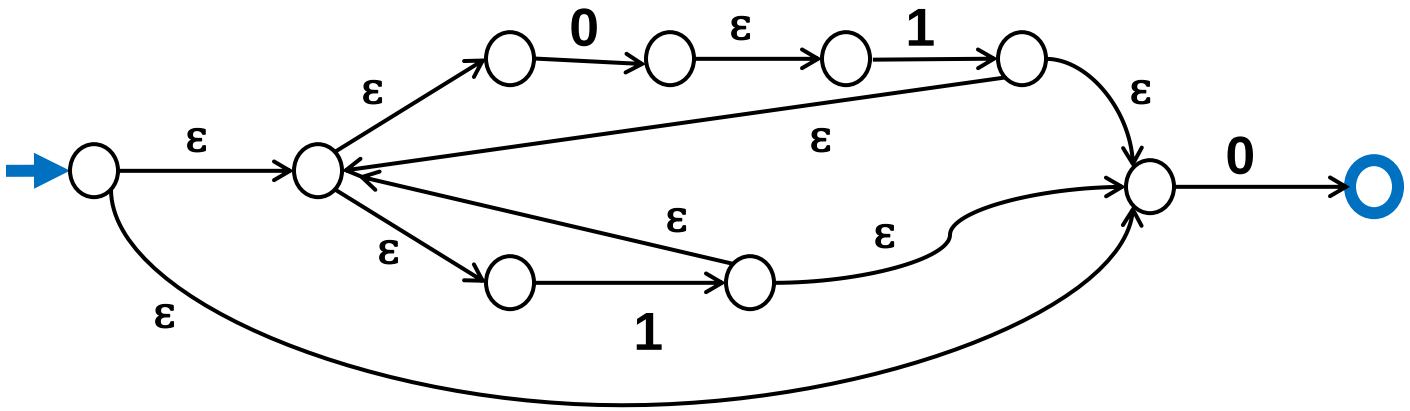

NFAs vs. DFAs

Every DFA **is** an NFA

- DFAs have requirements that NFAs don't have

Can NFAs recognize more languages?

NFAs vs. DFAs

Every DFA **is** an NFA

– DFAs have requirements that NFAs don't have

Can NFAs recognize more languages? No!

Theorem: For every NFA there is a DFA that recognizes exactly the same language.

conversion of NFAs to DFAs

Proof Idea:

- The DFA keeps track of ALL the states that the part of the input string read so far can reach in the NFA
- There will be one state in the DFA for each *subset* of states of the NFA that can be reached by some string

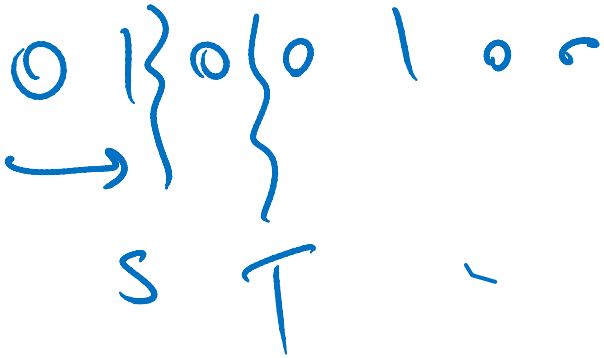

New start state for DFA

– The set of all states reachable from the start state of the NFA using only edges labeled ε

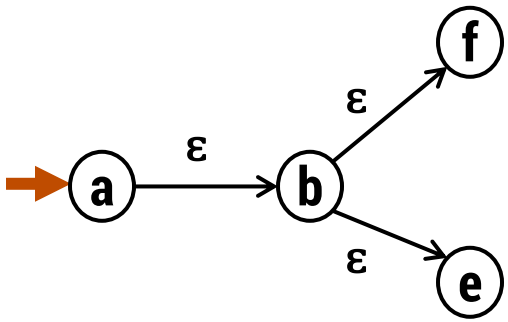

NFA

DFA

conversion of NFAs to a DFAs

For each state of the DFA corresponding to a set S of states of the NFA and each letter **a**

- Add an edge labeled **a** to state corresponding to T, the set of states of the NFA reached by
  - starting from some state in S, then
  - following one edge labeled by **a**, and
  - then following some number of edges labeled by ε
- T will be ∅ if no edges from S labeled **a** exist

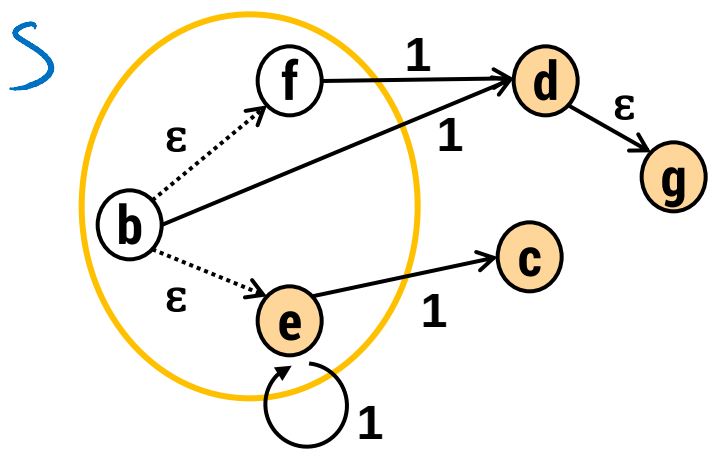

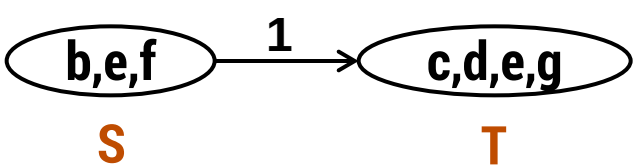

Final states for the DFA

– All states whose set contain some final state of the NFA

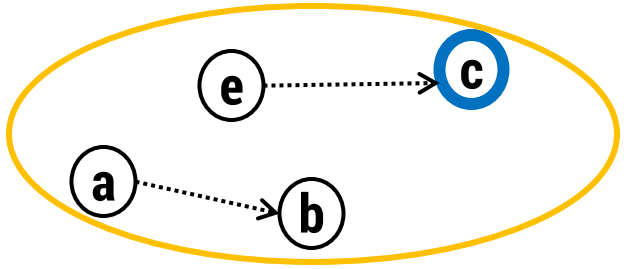

NFA

DFA

example: NFA to DFA

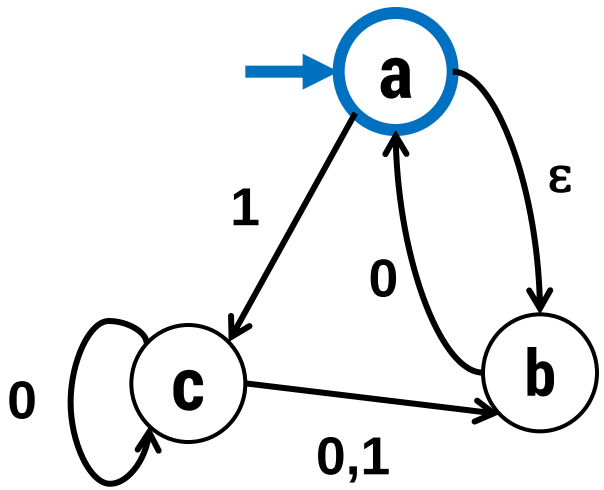

NFA

DFA

example: NFA to DFA

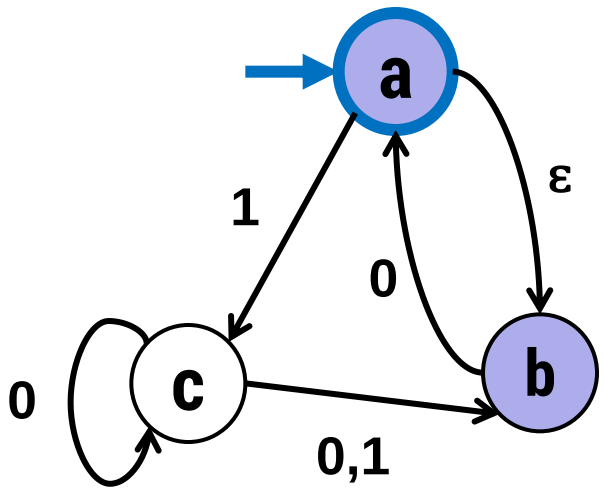

NFA

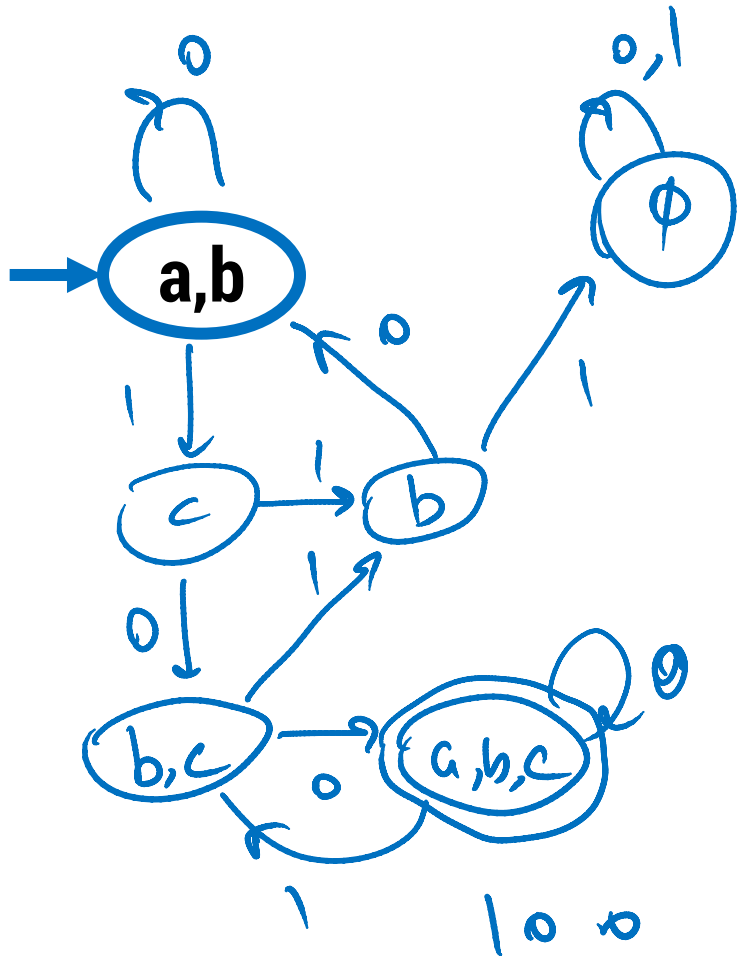

DFA

example: NFA to DFA

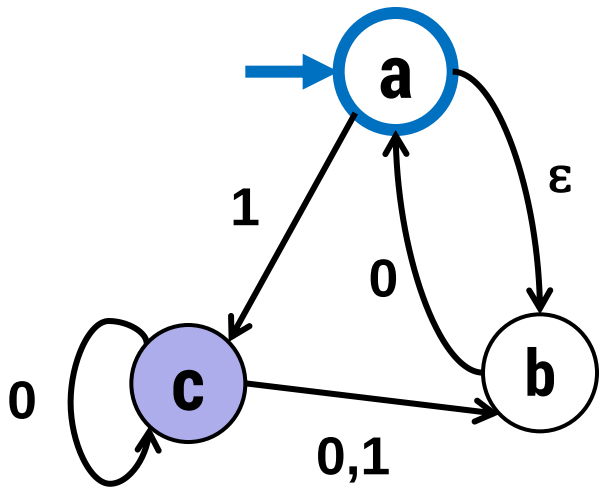

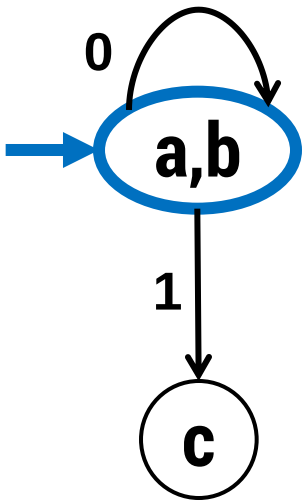

NFA

DFA

example: NFA to DFA

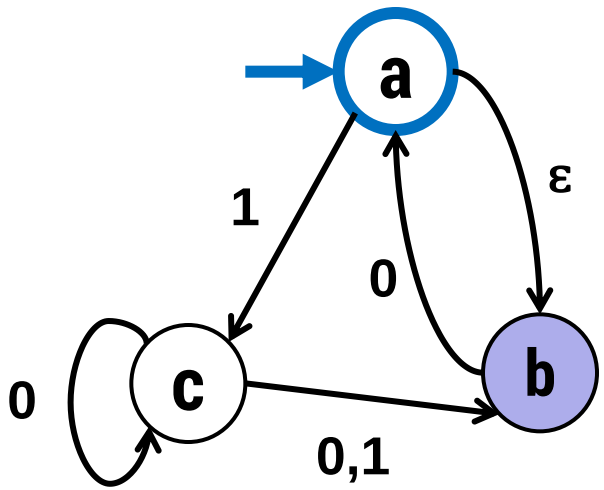

NFA

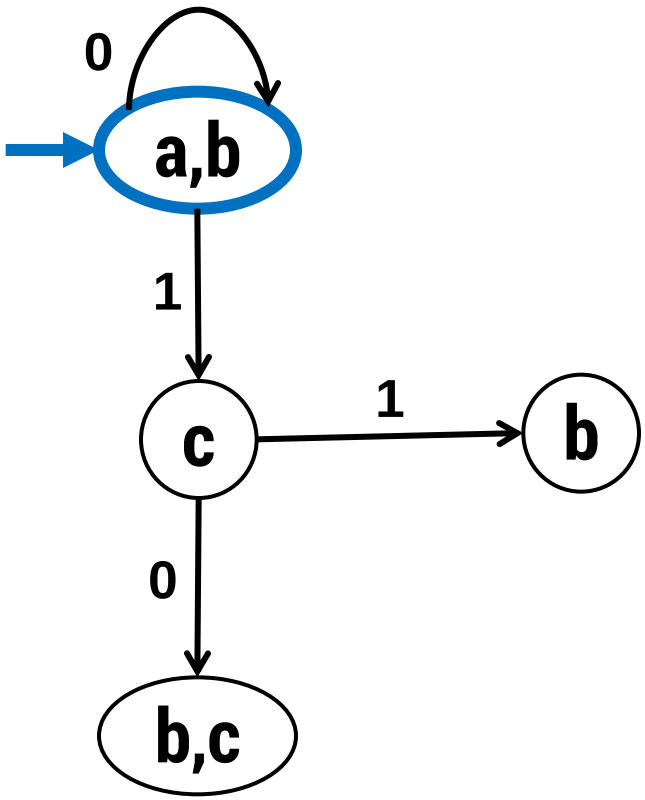

DFA

example: NFA to DFA

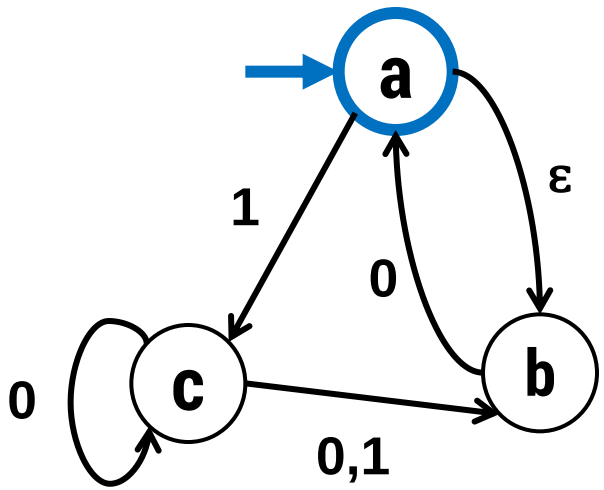

NFA

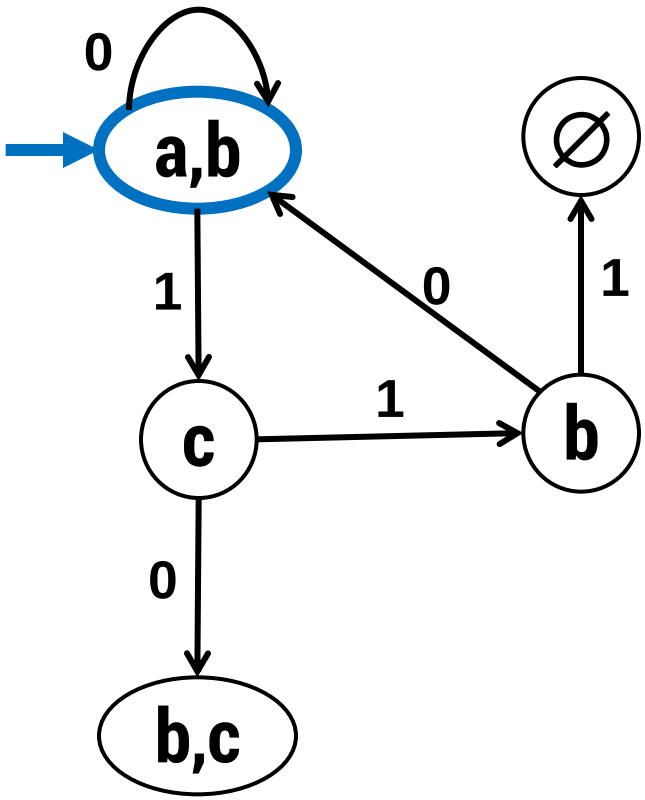

DFA

example: NFA to DFA

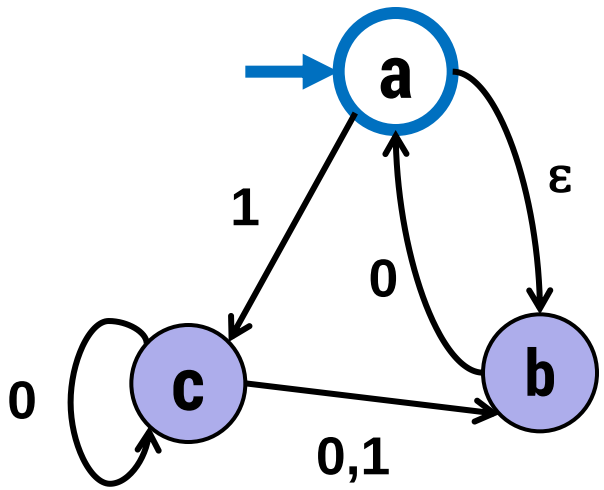

NFA

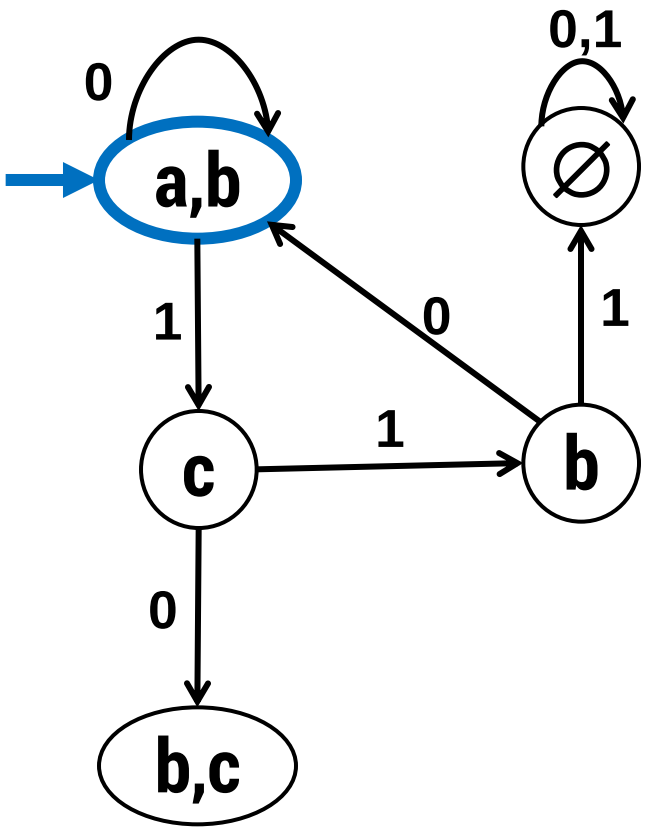

DFA

example: NFA to DFA

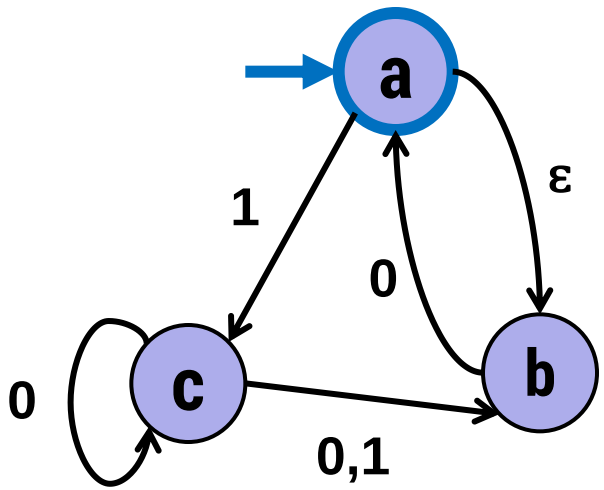

NFA

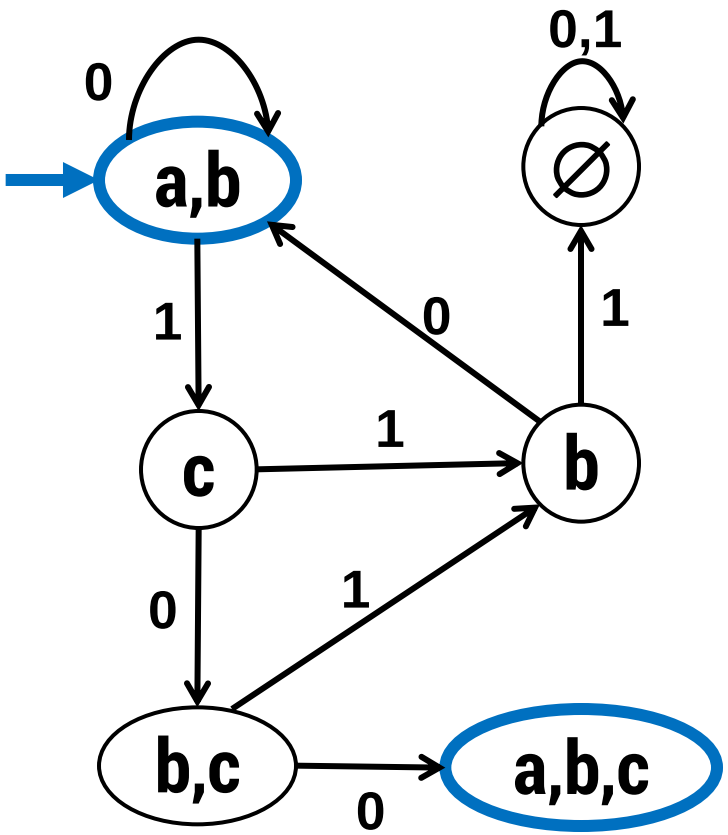

DFA

example: NFA to DFA

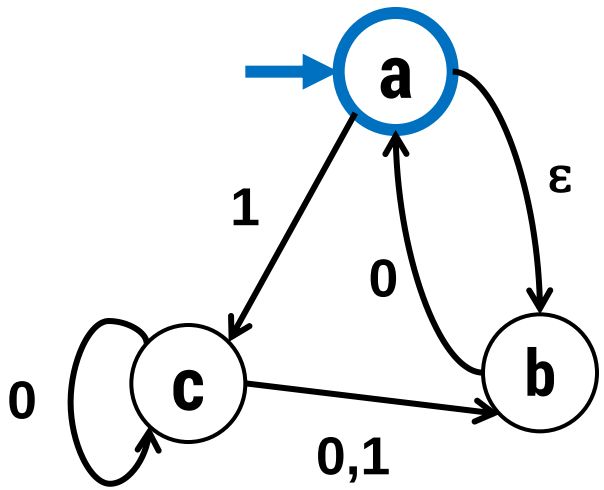

NFA

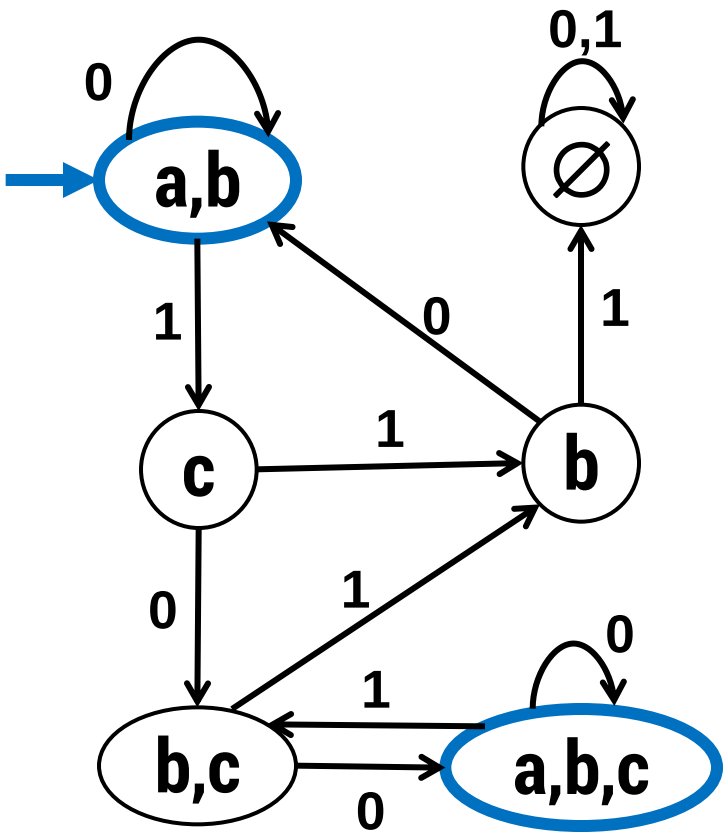

DFA

exponential blow-up in simulating mondeterminism

- In general the DFA might need a state for every subset of states of the NFA
  - Power set of the set of states of the NFA
  - n-state NFA yields DFA with at most 2^n states
  - We saw an example where roughly 2^n is necessary

    Is the nth char from the end a 1?

- The famous "P=NP?" question asks whether a similar blow-up is always necessary to get rid of nondeterminism for polynomial-time algorithms

1 in ~~third~~ n position from end

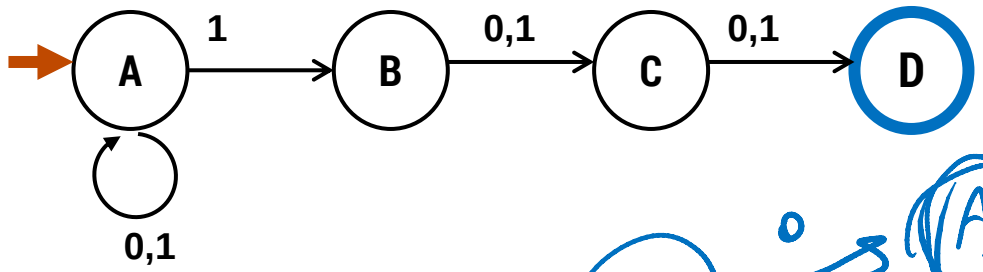

NFA with n states

DFA.

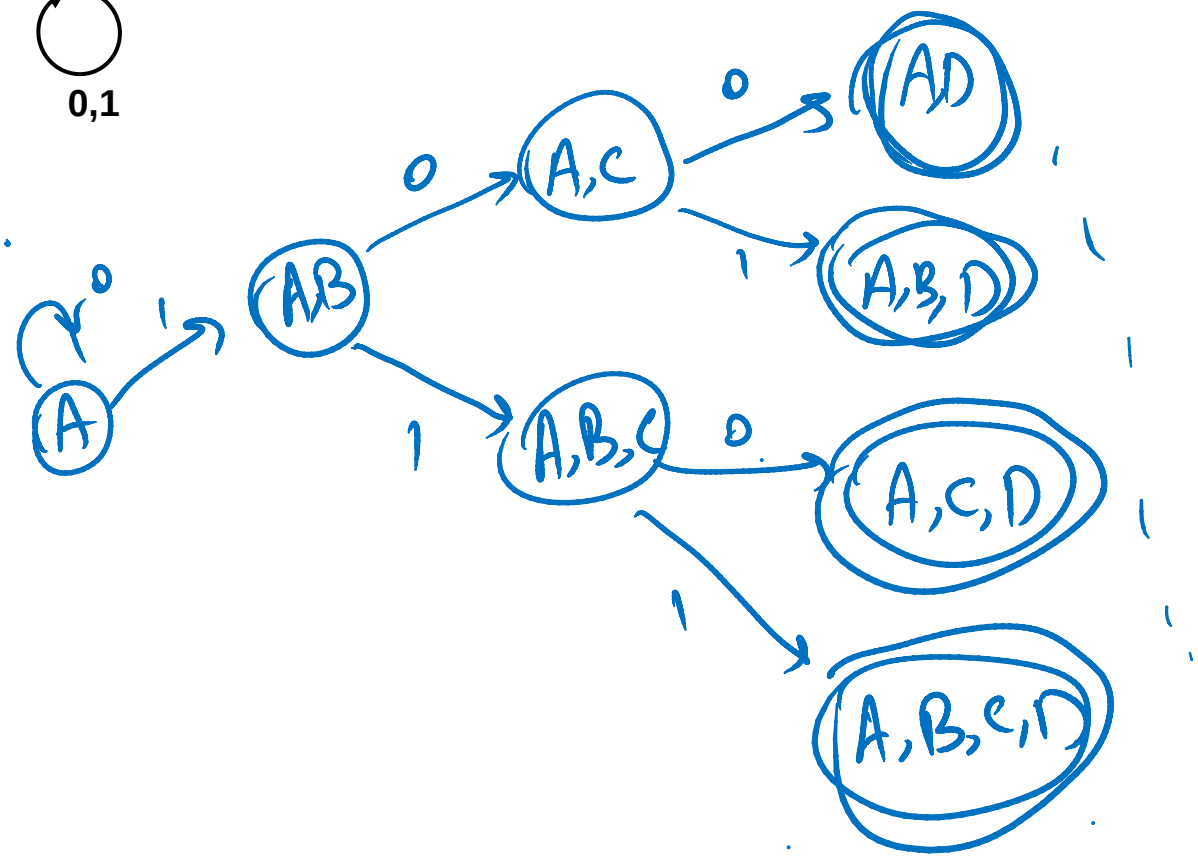

1 in third position from end

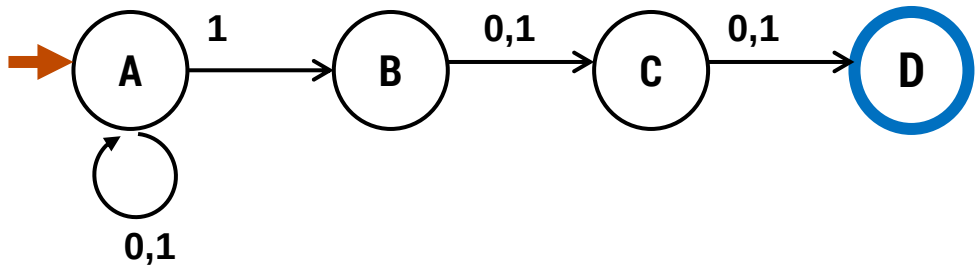

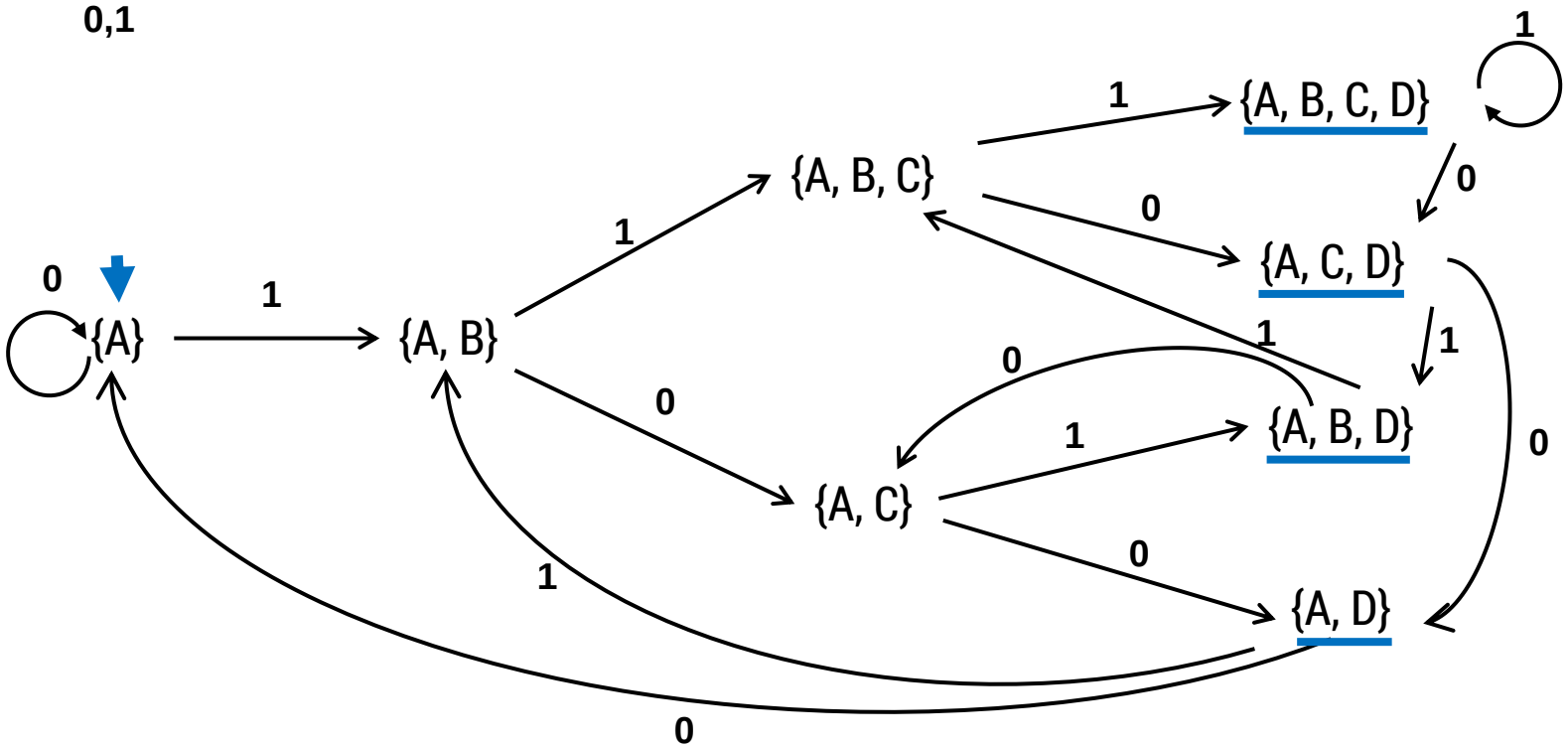

1 in third position from end

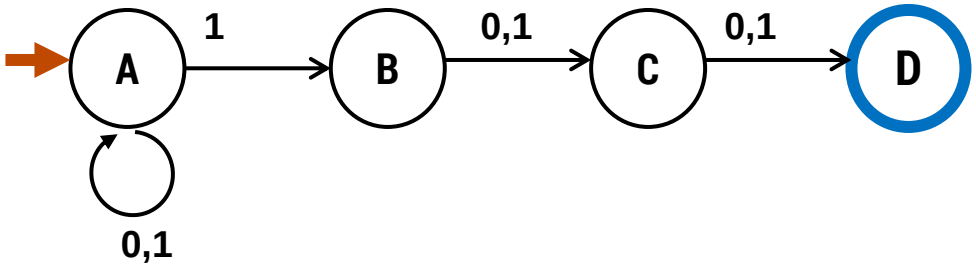

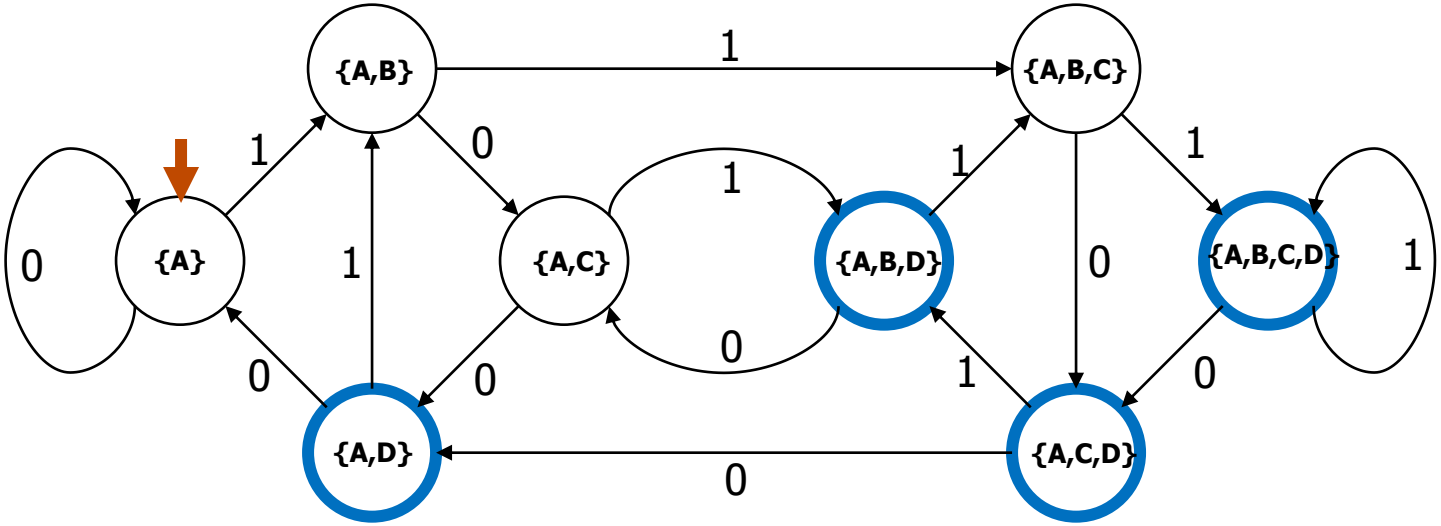

DFAs ≡ regular expressions

We have shown how to build an optimal DFA for every regular expression

- Build NFA
- Convert NFA to DFA using subset construction
- Minimize resulting DFA

Theorem: A language is recognized by a DFA if and only if it has a regular expression.

We show the other direction of the proof at the end of these lecture slides.

languages and machines!

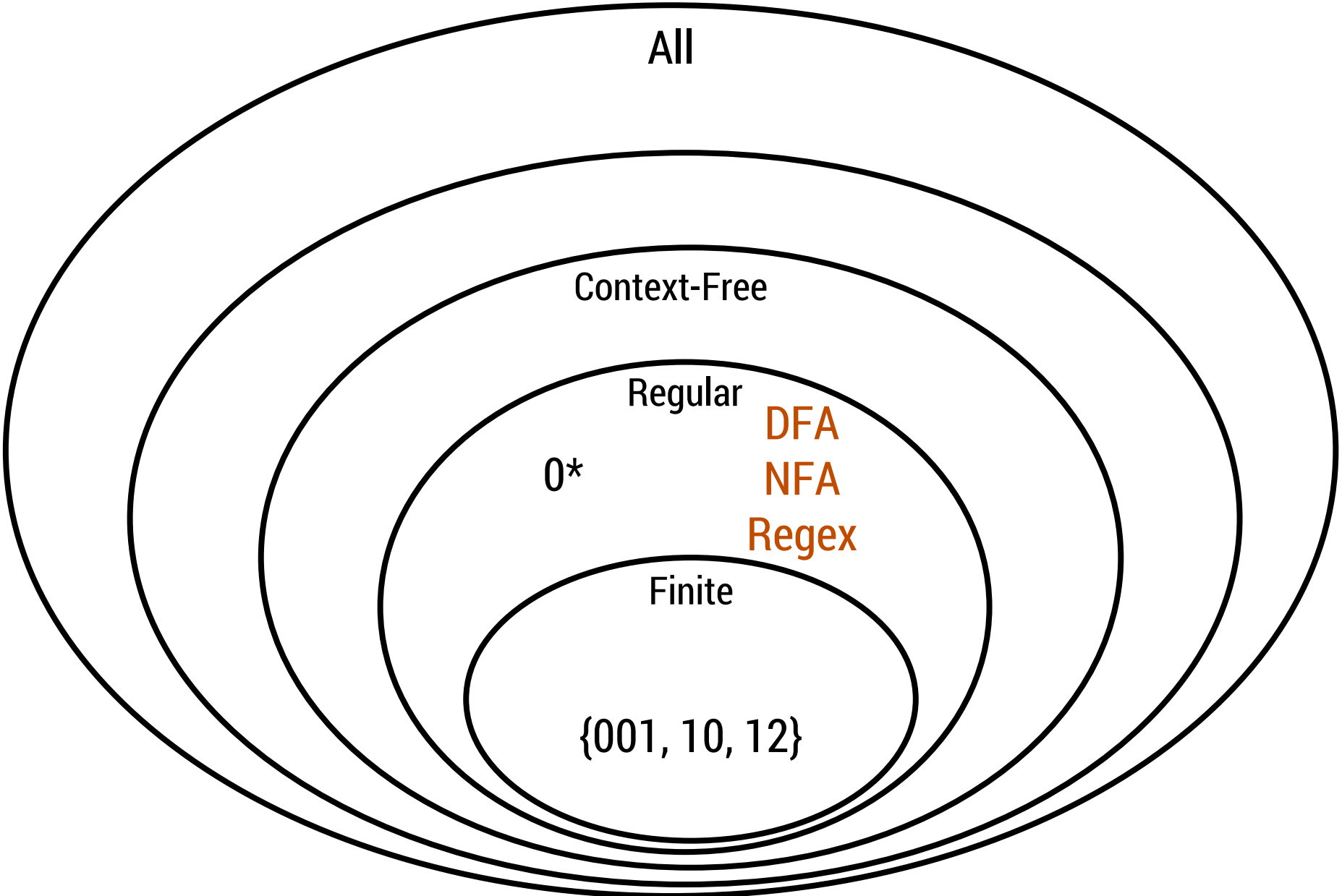

languages and machines!

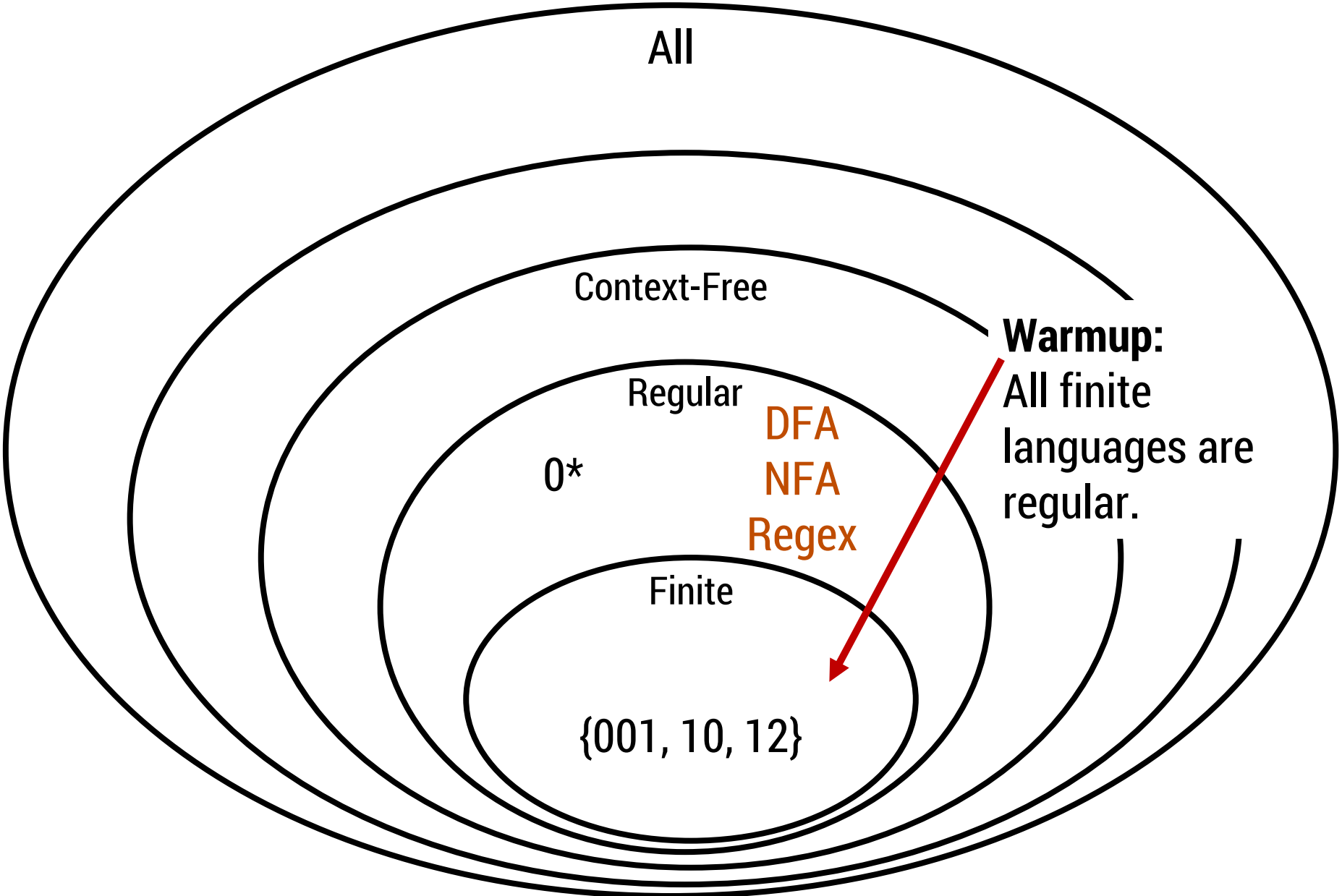

DFAs recognize any finite language

Exercise: Hard code it into the NFA.

$$L = \{w_1, w_2, \ldots, w_k\}$$

$$w_1 \cup w_2 \cup \ldots \cup w_k$$

languages and machines!

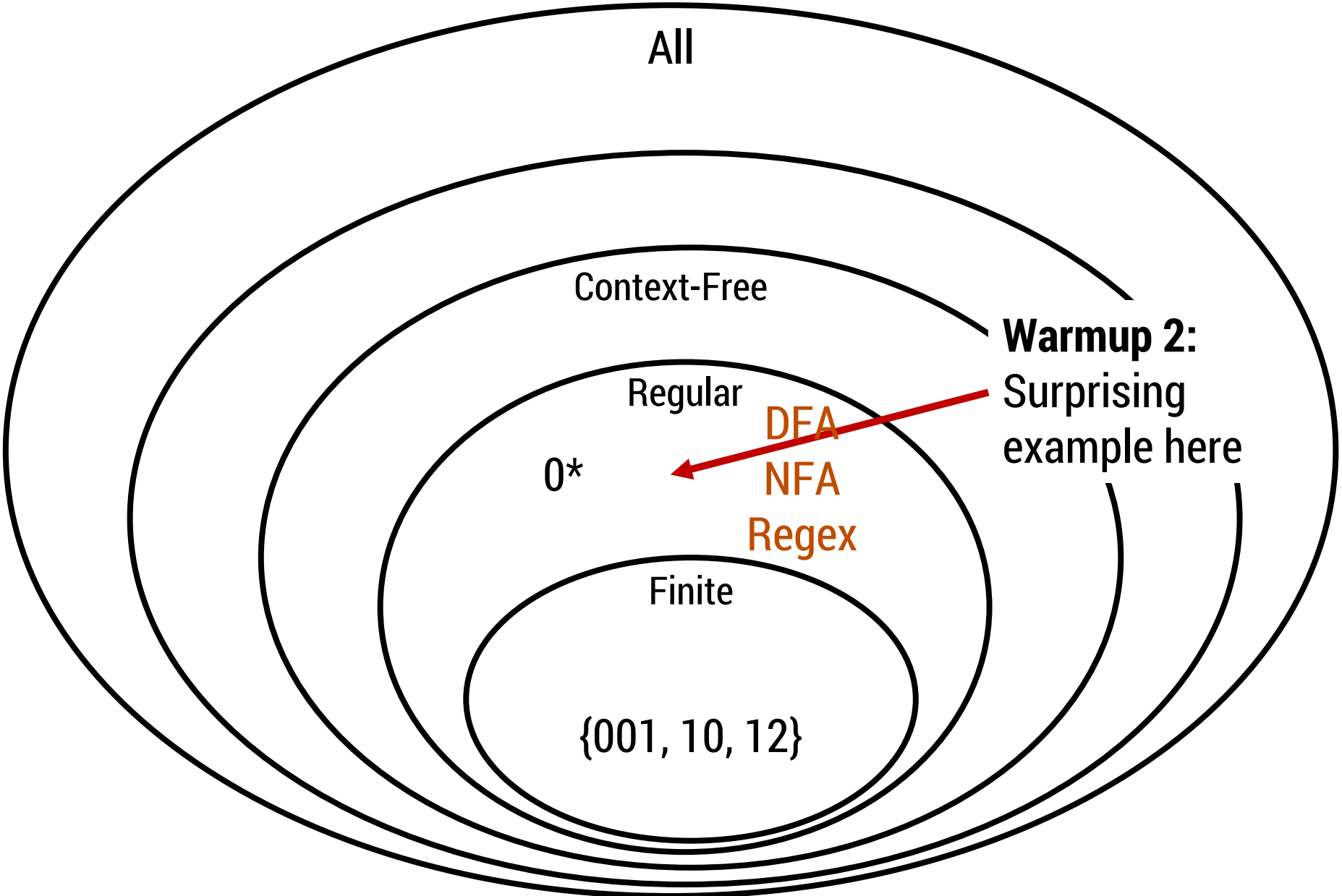

languages and machines!

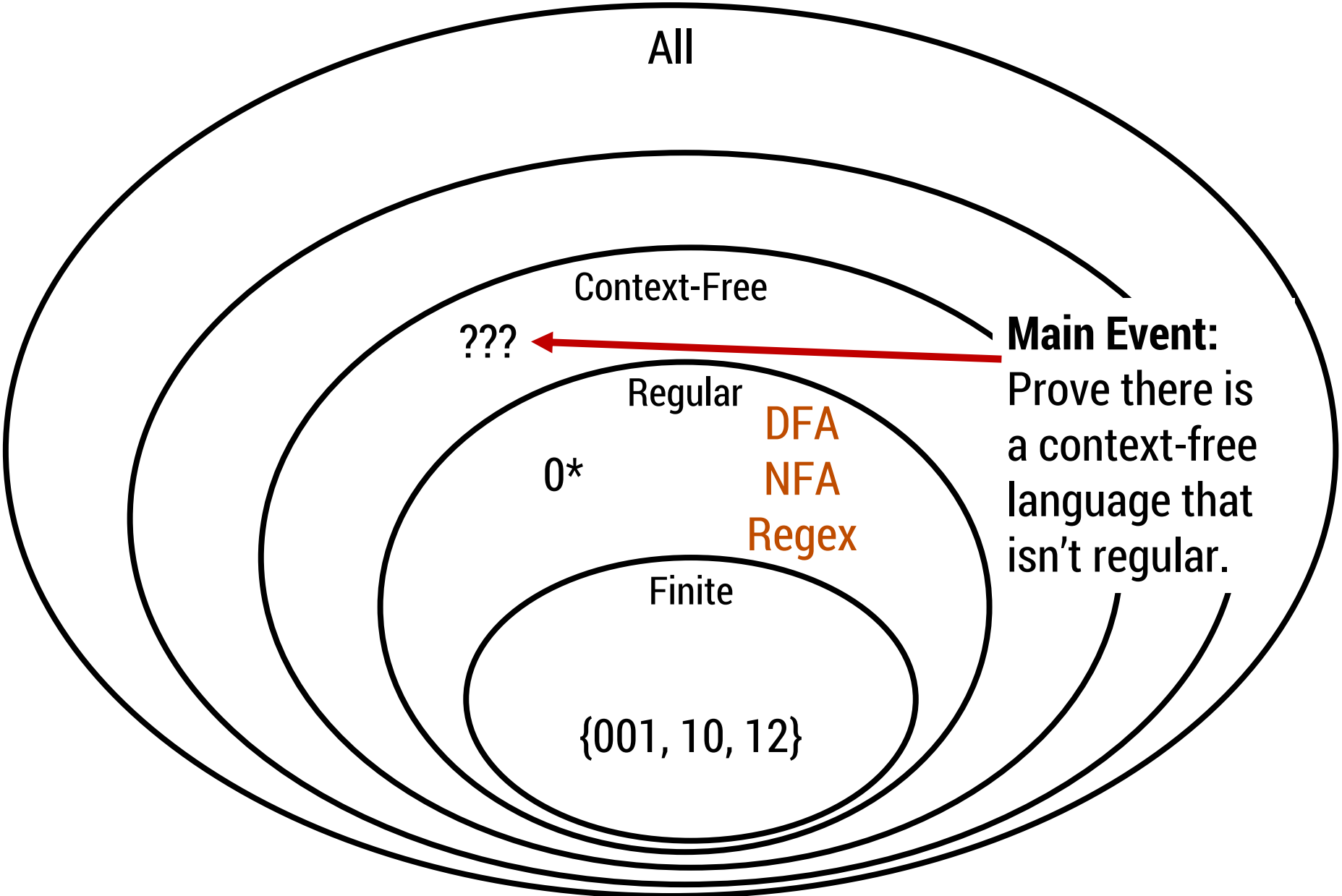

Main Event:
Prove there is a context-free language that isn't regular.

DFAs ≡ regular expressions

Theorem: A language is recognized by a DFA if and only if it has a regular expression

Proof: We already saw: RegExp → NFA → DFA

Now: NFA → RegExp

(Enough to show this since every DFA is also an NFA.)

generalized NFAs

- Like NFAs but allow
  - Parallel edges
  - Regular Expressions as edge labels

    NFAs already have edges labeled ε or ***a***
- An edge labeled by **A** can be followed by reading a string of input chars that is in the language represented by **A**
- A string x is accepted iff there is a path from start to final state labeled by a regular expression whose language contains x

starting from an NFA

Add new start state and final state

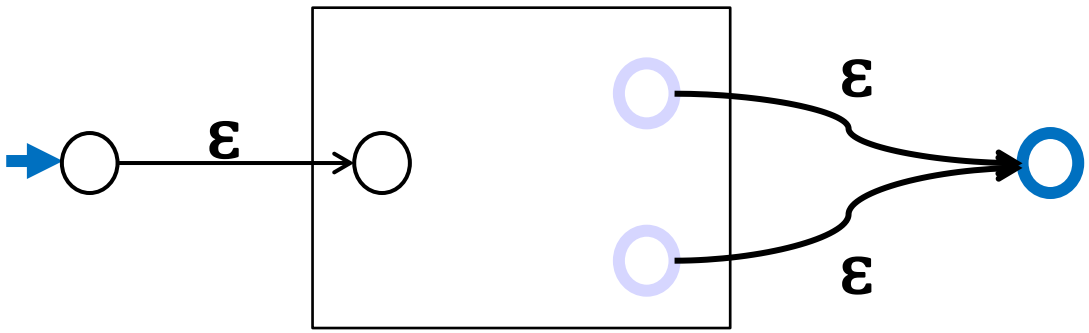

Then eliminate original states one by one,
keeping the same language, until it looks like:

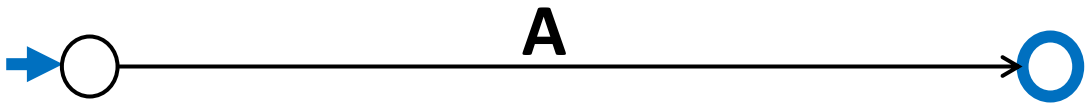

Final regular expression will be **A**

only two simplification rules

- Rule 1: For any two states q_1 and q_2 with parallel edges (possibly $q_1=q_2$), replace

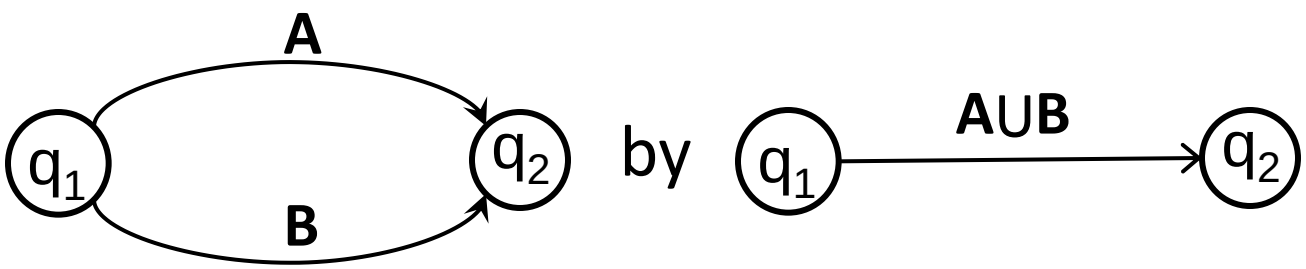

- Rule 2: Eliminate non-start/final state q_3 by replacing all

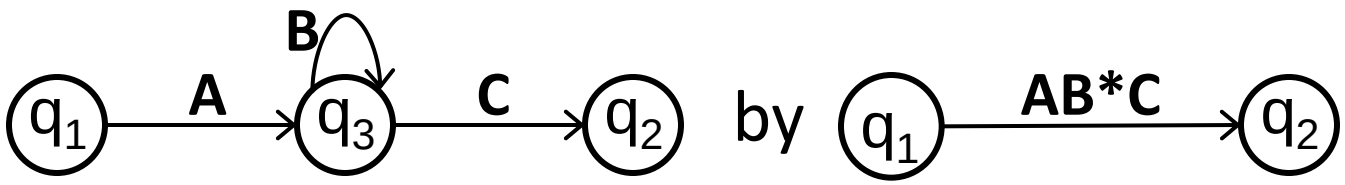

for *every* pair of states q_1, q_2 (even if $q_1=q_2$)

converting an NFA to a regular expression

Consider the DFA for the mod 3 sum

- Accept strings from {0,1,2}* where the digits mod 3 sum of the digits is 0

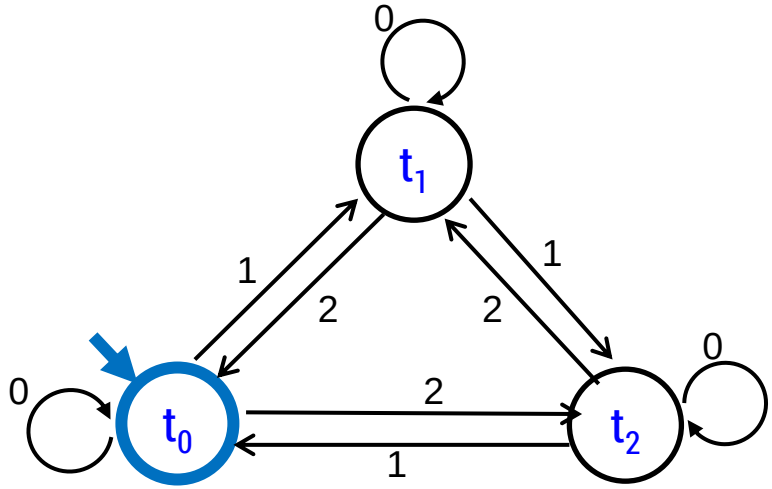

Label edges with regular expressions

$t_0 \rightarrow t_1 \rightarrow t_0$: 10*2
$t_0 \rightarrow t_1 \rightarrow t_2$: 10*1
$t_2 \rightarrow t_1 \rightarrow t_0$: 20*2
$t_2 \rightarrow t_1 \rightarrow t_2$: 20*1

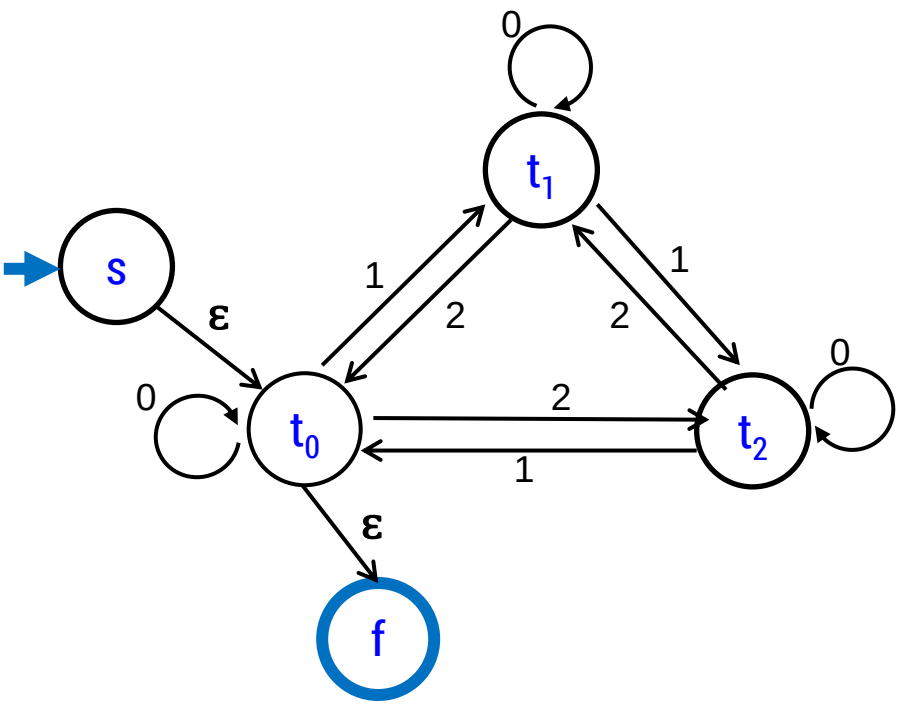

finite automaton without t_1

R_1: $0 \cup 10^*2$
R_2: $2 \cup 10^*1$
R_3: $1 \cup 20^*2$
R_4: $0 \cup 20^*1$

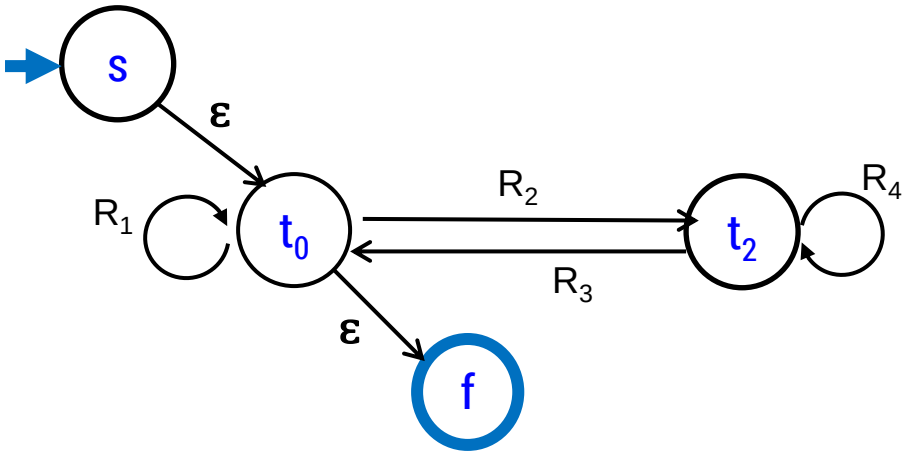

R_5: $R_1 \cup R_2R_4^*R_3$

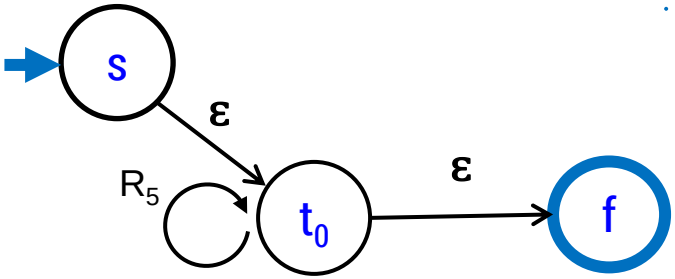

Final regular expression:
$(0 \cup 10^*2 \cup (2 \cup 10^*1)(0 \cup 20^*1)^*(1 \cup 20^*2))^*$