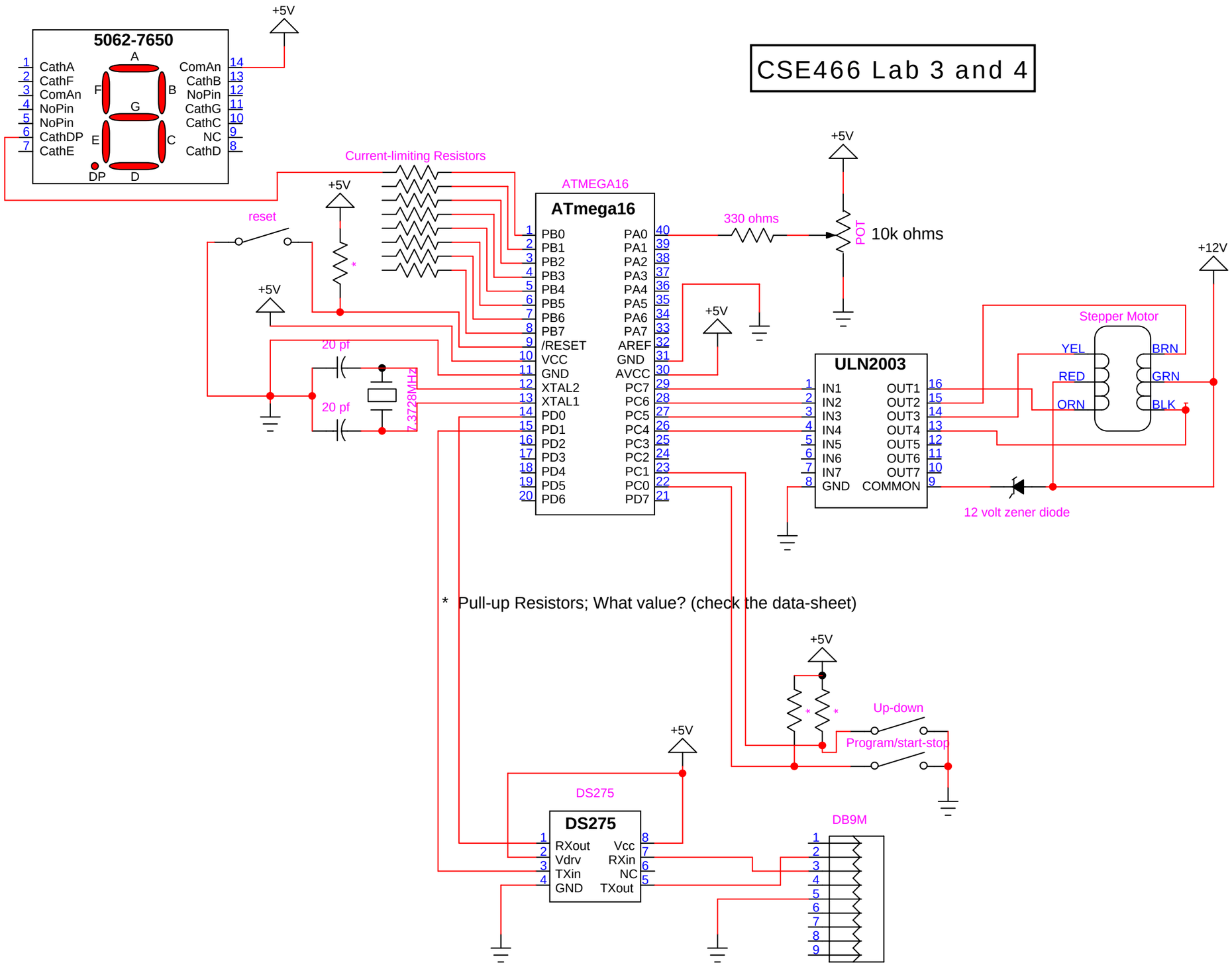
CSE466 Lab 3 and 4
5062-7650
CathA
CathF
ComAn
NoPin
NoPin
CathDP
CathE
ComAn
CathB
NoPin
CathG
CathC
NC
CathD
A
B
C
D
E
F
G
DP
+5V
Current-limiting Resistors
ATMEGA16
ATmega16
PB0
PB1
PB2
PB3
PB4
PB5
PB6
PB7
/RESET
VCC
GND
XTAL2
XTAL1
PD0
PD1
PD2
PD3
PD4
PD5
PD6
PA0
PA1
PA2
PA3
PA4
PA5
PA6
PA7
AREF
GND
AVCC
PC7
PC6
PC5
PC4
PC3
PC2
PC1
PC0
PD7
reset
20 pf
20 pf
7.3728MHz
330 ohms
POT
10k ohms
ULN2003
IN1
IN2
IN3
IN4
IN5
IN6
IN7
GND
OUT1
OUT2
OUT3
OUT4
OUT5
OUT6
OUT7
COMMON
+12V
Stepper Motor
YEL
RED
ORN
BRN
GRN
BLK
12 volt zener diode
* Pull-up Resistors; What value? (check the data-sheet)
Up-down
Program/start-stop
DS275
RXout
Vdrv
TXin
GND
Vcc
RXin
NC
TXout
DB9M